PEREKO®

ciepło jest żółte

Operation and maintenance manual for the boilers with feeder

KSP Duo

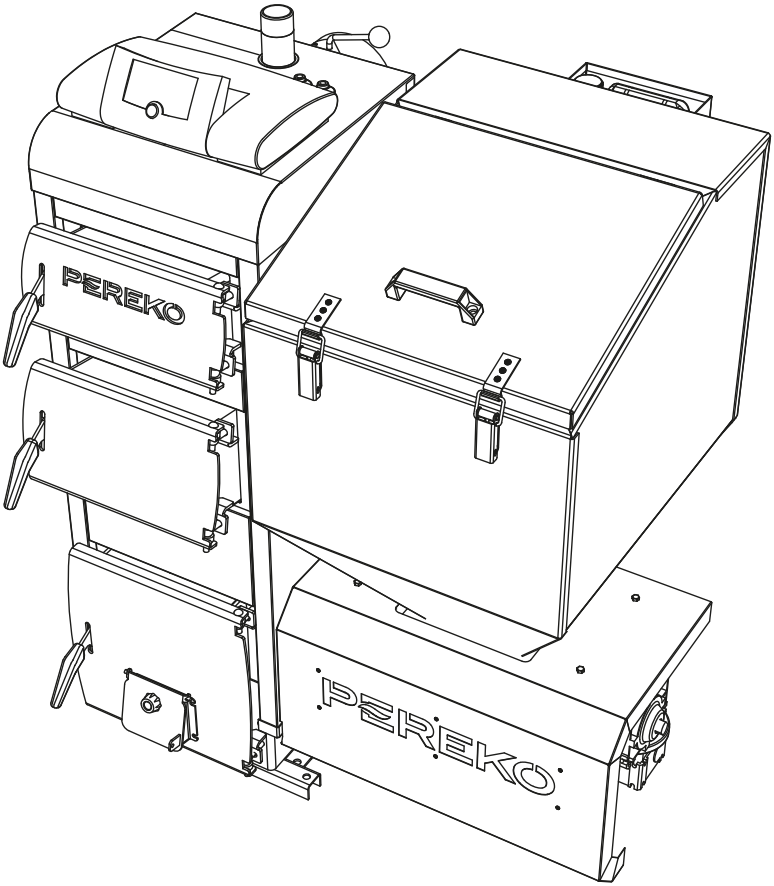

Thank you for purchasing PEREKO boiler. This technical documentation applies to feeder boilers from the KSP Duo series and contains all necessary information and recommendations for their operation.
Please carefully read this document before start-up of the boiler. Observance of the guidelines contained in the manual will ensure safety and prevent against misuse of the equipment and its faulty operation.

A set of documents intended for the user contains manual for the microprocessor temperature controller (regulator), feeder and fan, which should be read and understood. Manuals should be kept and stored in a way allowing using them also during servicing of the equipment.

TABLE OF CONTENTS

1. INTRODUCTION

1.1. Obligations of the user and guidelines concerning safety

To assure operational safety and maintain optimum operation of the equipment:

- read the manual of the boiler, controller, feeder and observe their guidelines,
- the manual should be kept and stored in a safe place in the boiler room allowing using it during any moment of boiler operation,
- ensure that the drive is never operated by children or persons who have not read the contents of the manual and adults with disabilities preventing them from the safe operation,
- the system should be made in compliance with the applicable regulations and in accordance with the rules and recommendations contained in the manual,
- before setting and connecting the boiler check whether all components are in good working order and whether the boiler has a complete equipment for servicing and cleaning,
- the boiler should be cleaned on regular basis, at least once per week, removing a layer of deposited soot and ash, which reduces the efficiency of the boiler,
- ensure continuous access to the equipment,
- avoid exceeding water temperature in boiler over 95°C,
- maintain operating pressure not exceeding 1.5 bar.

NOTE! Boiler installation in accordance with the applicable standards and regulations and first start-up should be carried out by a qualified installer.

1.2. Selection of correct power of the boiler

Nominal power of purchased boiler (that is maximum thermal efficiency, which can be reached during continuous use maintaining the efficiency declared by the producer) should be selected in a way corresponding the real demand for thermal energy even in case of occurrence of very low temperatures.

Do not purchase boiler with power higher than this planned in the design. Selecting boiler with too high power will result in higher fuel consumption and lack of full control over the combustion process and therefore higher operation costs, while too small boiler will not ensure sufficient power necessary to heat up the building.

Approximate boiler power can be calculated using a power calculator on our website *www.pereko.pl* Furthermore, you should also consider: thickness of walls and insulation, the thermal permeability of first fix joinery (including: tightness of windows and doors, type of window panels used) and climatic zone, where the heated building is located.

2. TECHNICAL DESCRIPTION

2.1. Intended use

KSP Duo feeder boilers belong to a group of low-temperature boilers and are not subject to registration in the regional Office of Technical Inspection. They are intended for operation in water distribution piping of the gravity hot-water systems or in open systems with forced circulation in single-family houses, garages, commercial buildings, maintenance rooms etc. having

protections conforming the requirements of the standard PN 91/B-02413, applying to protection of open water heating installations, considering the Regulation of the Minister of Infrastructure, Journal of Laws of 2009, no. 56, item 461.

These boilers are approved for operation in the systems where working pressure does not exceed 1.5 bars and the highest water temperature in the boiler 95°C.

2.2. Design description

2.2.1. Doors

KSR Duo boilers are equipped with upper cleaning doors, furnace doors and ash-pan doors. All doors are equipped with the glow plates protecting against excessive heating up.

Cleaning doors

Cleaning doors are used for cleaning of convection channels.

Furnace doors

Furnace doors are used for firing up and control of combustion process and for cleaning of heatable surfaces. These doors are used also for combustion in the boiler using "conventional method" on the water-cooled grate in case of power stoppage.

Ash-pan doors

Ash-pan doors allows removal of ash formed during the combustion process.

Cleaning hole (cleanout)

Cleaning hole is used for cleaning of convection channels.

2.2.2. Body - water jacket

The water jacket is a space filled with heating medium - water. The structure is made of steel sheet P265GH for pressure equipment intended for operation at elevated temperature. The thickness of a metal sheet of the body from flame side equals to 6 mm. Design solution allows efficient reception of heat by use return of flue gas. Convection channels are located in such way that they are cleaned through the upper cleaning hole.

2.2.3. Thermal insulation panels

Insulation panels fixed on the surface of the water casing limits heat losses to the environment. They are made of aesthetic cartridges made of a zinc-plated metal sheet, painted with powder paint ensuring high anti-corrosion protection. The cartridges are lined with a mineral wool from the inside, which is used as an insulation material.

2.2.4. Electronic controller

Microprocessor controller, installed in upper front part of the boiler allows programming temperature of boiler operation and programming changes of temperature of its operation at any time. The controller is also responsible for the so-called blowing of the furnace chamber. The controller is also equipped with operation control sensor and sensor of emergency boiler shutdown after exceeding water temperature 95°C. Detailed information you will find in the "*User's manual of microprocessor temperature controller*", enclosed in the boiler documentation.

2.2.5. Forced draught fan

Forced draught fan is intended to supply sufficient amount of air to the furnace. Amount of supplied air varies and it is automatically controlled by the controller. Detailed information is contained in the *Forced draught fan user's manual* enclosed to the boiler documentation.

2.2.6. Set of feeder with burner

Feeder unit with the burner is driven by the motoreducer and it is installed on the left or the right side of the boiler. Its task is to take the fuel from the container and feed it automatically to burner part. PSQ trough burner is used in the KSP Duo boiler series.

Design of the unit allows quick assembling and disassembling. Fuel container with tightly closed cover is installed on the feeder unit. Detailed information is contained in the *Feeder user's manual* enclosed in the boiler documentation.

2.2.7. Outlet water connection

Outlet water connection is a connection to the central heating system on the hot water side.

2.2.8. Return water connection

Return water connection is a connection of boiler to the central heating system on the cold water side returning from the system.

2.2.9. Flue with a damper

Flue with rotary flue gas damper is an integral part of the boiler, which discharges flue gas towards the chimney flue.

2.2.10. Flue gas swirlers

Flue gas swirlers are located inside the convection ducts to swirl flue gas stream, what has an influence on the increase of efficiency and the boiler power. They should be removed in case of weak chimney draught.

2.2.11. Water tubes

Water tubes (only KSP Duo 12) are steel components filled with water permanently located in the convection ducts. Their function is to extend the heating surface of the boiler, that is to increase its power and efficiency by more efficient heat reception from the flue gases.

2.2.12. Grate

The water-cooled grate is filled with water and is used as an additional furnace. It can be used as an emergency grate during boiler failure or during power stoppage.

2.2.13. Fire-fighter

Thermal safety valve protecting the fuel in the container against ignition. In case of fire glow reversing or getting to the feeder pipe, the valve temperature sensor opens the valve and floods it with water from a 5l container connected with a hose.

2.3. KSP Duo boiler design diagram

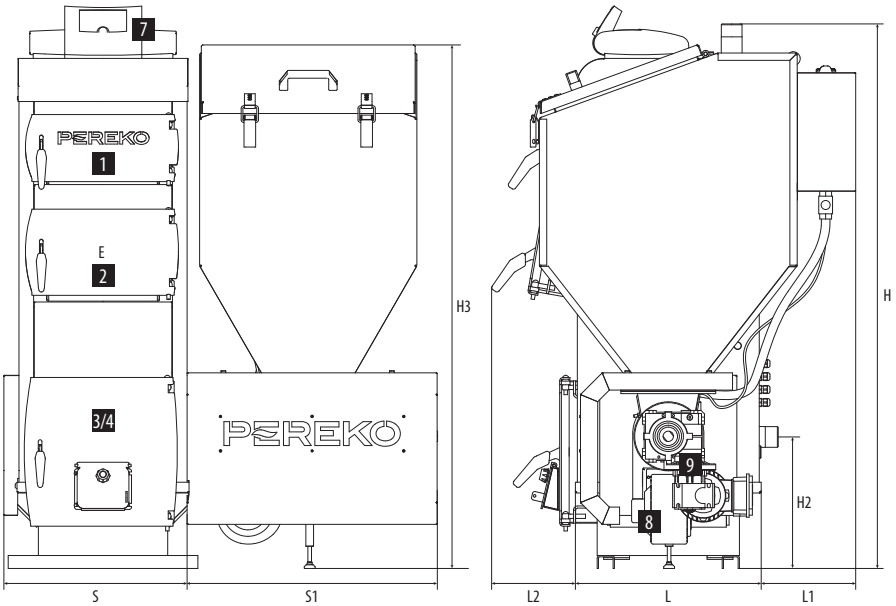

1. Cleaning doors
2. Furnace doors
3. Ash-pan doors
4. Ash-pan drawer
5. Water jacket
6. Thermal insulation panels
7. Boiler controller
8. Forced draught fan
9. Feeder
10. Burner
11. Outlet water (hot) connection
12. Return water connection
13. Flue with a damper
14. Flue gas swirlers
15. Water tubes
16. Grate
17. Fire-fighter

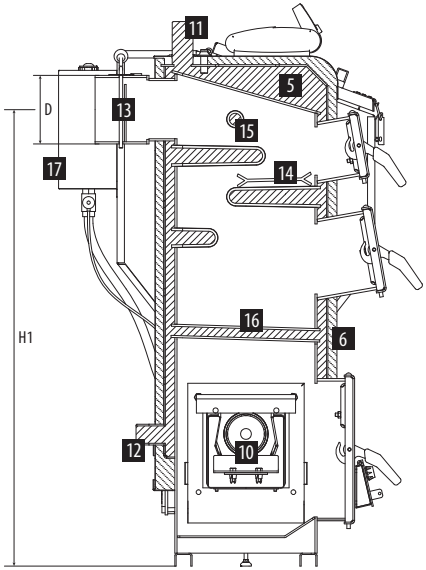

2.4. Operation and technical parameters

Parameter		Unit	KSP Duo				
			12	18	26	36	52
Dimensions	D	[mm]	∅ 159		∅ 178		∅ 219
	E	[mm]	248×173	248×198	348×248		
	L1	[mm]	220	180	140		
	L2	[mm]	180	140			
	L	[mm]	420	525	595		675
	H	[mm]	1260	1385	1410	1565	1770
	H1	[mm]	1060	1155	1180	1335	1530
	H2	[mm]	305	310			330
	H3	[mm]	1215	1560			
	S	[mm]	460	510	600		720
	S1	[mm]	550	650			
Primary fuel		—	eco-pea coal, fine coal, pellet, oats				
Efficiency		[%]	58-92				
Thermal power range*		[kW]	3 – 12	5 – 18	8 – 26	10 – 35	15 – 50
Area of heated rooms**		[m²]	≤ 218	≤ 327	≤ 473	≤ 655	≤ 945
Heated rooms volume		[m3]	≤ 545	≤ 818	≤ 1182	≤ 1636	≤ 2364
Charging capacity of container		[dm³]	150	300			
Charging capacity of furnace chamber		[dm³]	~ 17	~ 30	~ 45	~ 58	~ 60
Boiler water capacity		[dm³]	38	50	65	75	103
Heat exchanger material		—	Steel P265GH [PN-EN 10028]; thickness 5 and 6 mm				
Maximum operating pressure		[bar]	1,5				
Required min. chimney draught***		[Pa]	20		25		30
Supply / Power		[V/W]	230 / 175				
Boiler weight without water		[kg]	278	370	436	478	675

*maximum water temperature in the boiler – 95°C; **for rooms height 2.5 m and insulation with styrofoam 15 cm (q = 55 W/m²); ***PN-EN 12809, PN-EN 303-5:2002;

2.5. Fuel

Fuel used for combustion in the boilers with feeders should have sufficient calorific value, be dried and have size recommended by the producer. Use of moist or too large fuel can lead to locking in the feeder and serious failure of the boiler. Furthermore, the unfavourable chemical composition of the fuel can result in sintering and formation of large amounts of dust and soot and increased fuel consumption.

Burn time and power are variable values depending on the method of boiler firing up. The given times apply only to operation with the correct fuel.

Boiler burn time depends on many factors: the calorific value of fuel, thermal insulation of building, equipment receiving the heat (heaters, boiler, floor heating). Burn time period is longer by several hours during boiler operation with lower thermal power.

PRIMARY FUEL **its use ensures that the boiler will achieve declared heating power and efficiency**	pellet, eco-pea coal, fine coal, oats, lignite
FUEL FED TO WATER-COOLED GRATE **it is combusted periodically only in emergency cases**	nut coal I/II, seasoned wood, brown coal, briquettes made of brown coal, briquettes made of sawdust and other long flame fuels

2.6. Equipment

The boiler is delivered in the assembled condition, ready for start-up. Prior to the setting you should check the presence of additional tools and operation of the instrumentation.

The complete set should include: feeder, container, controller, fan, brush, hook, ash shovel, drain cock, fuel swirlers (2 pcs.), user's manuals for: feeder, controller and fan.

3. BEFORE START-UP

3.1. Boiler setting

3.1.1. Boiler room

- It should be a separate room with height not lower than 2.2 m in the newly constructed building (in the already existing buildings the allowable height equals to 1.9 m).
- It should have artificial lighting installed and have natural lighting as far as practicable.
- It should have gravity ventilation in good working order, including:
  1. air-supply duct in the external wall with cross-section not lower than 50% of chimney cross-sectional area on height maximum 1 m over the flooring or not lower than 200 cm^2 for boilers with power up to 25 kW or 400 cm^2 for boilers over 25 kW,
  2. separate air-exhaust duct on the internal wall with cross-section not lower than 140×140 mm with an outlet located under the boiler-room roof near the chimney.

NOTE! It is forbidden to use mechanical exhaust ventilation in the room where the boiler was installed.

- Floor gully and floor with 1% slope towards the outlet should be foreseen in the central part of the room.
- Flooring and walls in the whole room should be made of non-combustible materials.
- The doors to the boiler room should open outwards.

3.1.2. Method for boiler setting

The boiler does not require a foundation and it is allowed to set it on wall base with height not lower than 50 mm. Method of boiler setting should ensure free access to the equipment allowing its cleaning and maintenance. While setting the boiler it is recommended to maintain minimum distances from the individual walls:

- distance from the front of the boiler to opposite boiler room wall should not be smaller than 1 m,
- the distance of boiler side from the wall of the boiler room should be lower than 0.5 m,
- the distance of rear part of the boiler from the wall of the boiler room should be equal to at least length of the connection, that is 0.5 m.

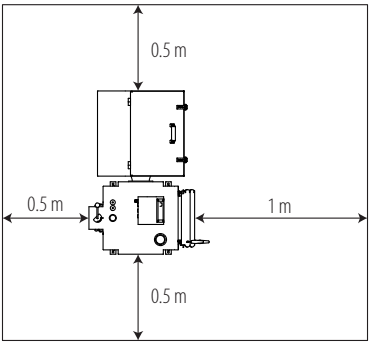

3.2. Connection to chimney

1. It is necessary to prepare stand-alone, tight chimney flue, which will be used for flue gas from the boiler.
2. The flue should be placed at least 1.5 m over the roof ridge to avoid the occurrence of backdraught. The intersection of the flue should be appropriately selected for the boiler power and height of the chimney. Approximate calculations of chimney height and intersection can be carried out using a chimney intersection calculator available on the website www.pereko.pl Regardless of the results of the calculations the minimum intersection of masonry chimney should not be lower than 14 × 14 cm! The intersection of non-insulated steel chimneys should be bigger by 20% and the chimneys made from steel pipes should be about 15-20% higher than brick chimneys.
3. Check condition of the chimney (preferably by a chimney sweep) before connecting the boiler to the chimney and check whether the chimney if free from connections of the heating elements.
4. The boiler should be connected with chimney using a connector. It is not recommended to use the connection at a straight angle because it will cause a loss in the chimney draught. Flue with chimney should be joined with a connector made of steel sheet of thickness 3 mm (to be purchased from the boiler producer). We put it on the outlet from the flue, fix on the chimney and seal with high-temperature silicone. The connector should be directed slightly upwards from 5° to 20°. If boiler flue will have a length over 400 mm then it is recommended to insulate it with a thermal insulation.

NOTE! Boilers should be installed in compliance with the applicable Regulation of the Minister of Infrastructure (Journal of Laws of 2002 no. 75 item 690 and Journal of Laws of 2009 no. 56 item 461.) In addition, it is recommended to use chimney liner resistant to corrosion: chemical, pitting, intercrystalline and surface.

3.3. Connection of central heating and domestic hot water system

3.3.1. Open water installations

KSP Duo boilers are intended for feeding water distribution piping in the open central heating systems with gravity or forced circulation of water. The system, where the boiler will be operated, should meet the requirements of the Polish Standard PN-91/B-02414 Heating and district heating – Protection of open water heating installations – Requirements.

Exemplary diagram of the open central heating system with four-way valve

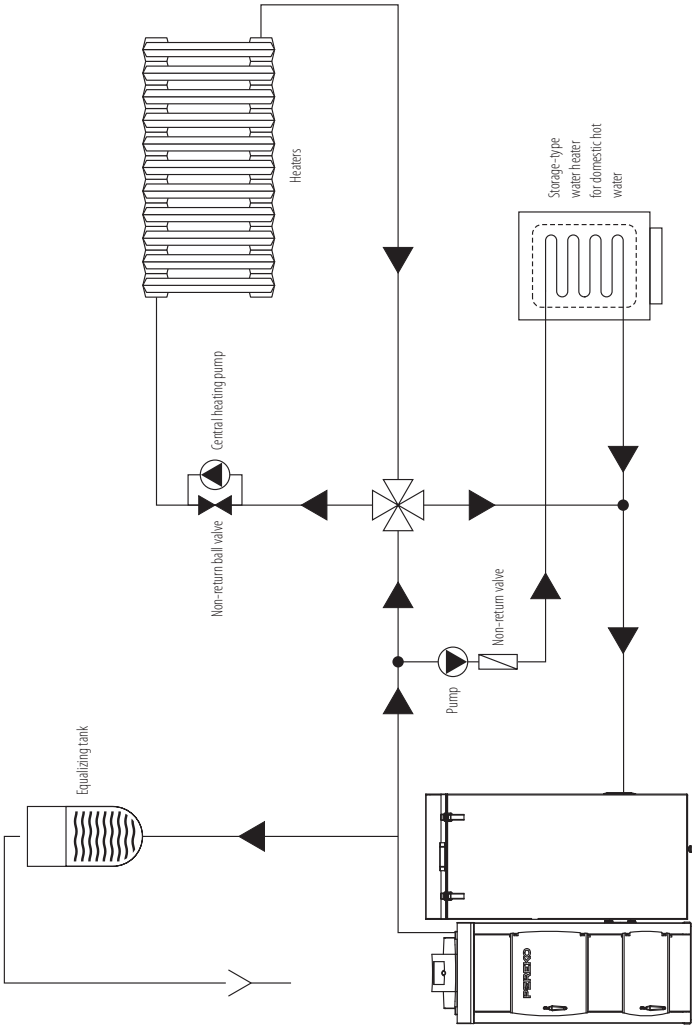

3.3.2. Closed water installations

PEREKO heating boilers fired with solid fuels and with automatic fuel charging with nominal power up to 52 kW can be used in closed water heating systems provided that: 1. the system has been equipped with membrane expansion vessel; 2. device intended for removal of heat excess, that is two-function cooling valve REGULUS DBV-1, was installed and 3. safety valve 1.5 bar was installed.

NOTE! Correct selection of protections and suitable expansion diaphragm vessel having influence on safety level of the system and the boiler. The above equipment should be rigorously inspected minimum twice per year. The first inspection should be carried out during seasonal start-up of the boiler with the water distribution system..

3.3.3. Four-way valve

Design of the heating system should take into account protection of the boiler against the return of too cold water from the system. It is recommended to use four-way mixing valve what allows the increasing temperature of water returning to the boiler.

Four-way valve mixes hot water from the supply with cooler water returning from the heating cycle and therefore:

- protects the boiler against low-temperature corrosion and premature wear,
- improves the efficiency of heating of tap water in the DHW storage tank,
- allows smooth adjustment of the temperature of the heating water with respect to the needs of the heating system,
- improves the efficiency of operation of the whole system.

Designing of the correct diagram of the system for the house and its execution should be entrusted to a person with appropriate qualifications. Central heating systems may differ and therefore it is necessary to stick to the guidelines included in the central heating design. Below you will find an exemplary connection diagram of the boiler to the central heating and domestic hot water system in the open system with gravitational or forced water circulation.

3.4. Connection of the boiler to electrical system

Boiler room should be equipped with electrical system with rated voltage 230/50Hz in compliance with the applicable regulations. The system should be terminated with plug-in socket equipped with protective conductor contact with connected protective conductor terminal PE to protect against electric shock.

3.5. Filling the system with water

3.5.1. Filling the boiler with water before first start-up

1. Flush heating system and boiler before filling it with water to remove all contaminations.
2. Fill the system with water through the drain cock using the flexible hose. Water intended for feeding the heating boiler should meet the requirements of the PN-93/C-04607 standard. Quality of water filling the central heating system influences its durability therefore this water should be free from the contaminations, oil and aggressive chemical substances. Water hardness should not exceed 2°tn (1°tn = 0.71 mval/l). Too hard water causes deposition of sediment in the boiler and heating system what decreases efficiency and may damage the boiler.
3. Stop feeding of water when the system is full that is water will start flowing out from the signalling pipe of the expansion vessel located in the highest point of the system or when the pressure gauge indicates approx. 0.8-1.2 bar. Refilling should take several seconds to make sure that the water flows down from the vessel.
4. Close boiler drain cock and disconnect flexible hose from the boiler when the system is filled.

3.5.2. Refilling the system with water

Heating system with open container allows direct contact of heating water with the air what results in evaporation and necessity to refill it.

NOTE! It is forbidden to add cold water to the hot system. Adding water to hot components of the boiler may damage it and is synonymous with loss of warranty.

The system can be refilled with water only when the boiler is cold. If it is necessary to refill the water in the system quickly then the user should remove fuel from furnace chamber, cool down the boiler to 30°C and then add required amount of water (see: *Emergency stop of boiler operation*). Firing up should be restarted after filling the system.

3.5.3. Draining water from the system

It is not recommended to drain the water from the system after the heating season because it increases the risk of occurrence of the corrosion and formation of boiler scale. The exception is a time needed to carry out necessary repair and long-term standstills of the boiler during strong frosts. In the latter case it is recommended to drain the water from the system to avoid freezing and therefore damages and refilling it when the frost is over.

3.6. Feeder assembly

Detailed assembly information is contained in the *Feeder user's manual* enclosed in the boiler.

4. SERVICE MANUAL

4.1. Safe operating conditions

To maintain safe operating conditions for the boiler you should:

- Execute heating system correctly in compliance with the requirements of the standards: PN 91/B-02413, applying to the protection of open water heating installations, considering the Regulation of the Minister of Infrastructure, Journal of Laws of 2009, no. 56, item 461.
- Fill the system with water correctly. Do not refill the system with cold water during operation of the hot boiler.
- It is forbidden to operate the boiler if the water level in the system is below the level indicated in the central heating system user manual.
- Never use flammable liquids, e.g. petrol, for firing up.
- Do not extinguish the fire in the furnace by pouring it with water.
- Use suitable equipment and protective clothing (gloves, goggles, head protection, shoes) during work with the boiler and take special care during servicing of non-insulated components (e.g. doors), which may heat up to high temperatures resulting in risk of burn injuries.
- Do not stay on the side of the boiler during the opening of the doors and pay attention to flames.
- Take care of cleanness in the boiler room, ensure proper ventilation and remove corrosive and flammable materials located nearby.
- The boiler should be cleaned only when it does not work.
- Use mobile lamps supplied with a voltage lower than 24V during works connected with servicing of the boiler.
- Take care of the good condition of the boiler and hydraulic system.
- Take care of boiler cleanness.

4.2. Before first firing up

Before the first start-up, please check:

1. Correctness of installation and connection to electrical system: a) actuator of the four-way valve (if any), b) central heating pump, domestic hot water pump, floor pump (if any), c) the sensor in the boiler, d) fan, e) feeder and fire-fighter.
2. Heating system: a) its tightness, whether there are no leaks of water from the boiler or system, b) whether the water is not frozen in the conductors and expansion vessel, c) whether water level and its pressure are correct and sufficient (pressure gauge depending on height of the building should indicate from 0.8 to 1.2 bar). If the pressure is too low you should add water by pouring it into the cold boiler.
3. Cleaning hole, which should be tight.
4. The correctness of boiler connection to the chimney.
5. Carry out measurements of chimney draught.

4.3. Firing up in the KSP Duo series boilers

1. Fill the fuel container with suitable fuel.
2. The close tightly flap of the container (hopper).
3. Open ash-pan doors.
4. Enter to manual mode by pressing "Enter" button (fan and feeder will be automatically activated) – see *Controller user's manual*.

5. Check operation of the individual equipment: a) operation of the fan, feeder, b) activation of the central heating pump, domestic hot water pump and floor pump, c) feeder (switch for a change of revolutions on a box of the electric motor should rotate to the right).
6. Turn off the fan. It feeds fuel to the feeder in manual mode. Wait 2-3 minutes until coal appears in the feeder at the height of air injection holes.
7. Spread the fuel aside. Place firestarter and paper on it and then pieces of small wood and fire it up. After firing up the chimney draught should suck flue gas to the convection ducts of the boiler.
8. Start the fan and adjust air blowing to ensure uniform combustions of the fuel when the wood and paper are fired up.
9. When the stable flame is achieved, when heat on furnace is generated, you should close the doors and switch the controller to automatic mode (fan, feeder and pump/pumps start to operate automatically). Select correct fuel from fuels available in the controller. Flame in the furnace should have a form of clean, intensive yellow flame. Red, smoky flame indicates too low supply of air, while white indicates that supply is too large. If the boiler burner operates correctly you should set: temperature of the central heating system (usually 60-80°C), the temperature of domestic hot water (45-55°C), the temperature of a four-way valve and temperature of floor pump (in acc. to *Controller user's manual*).

NOTE! Charging and cleaning doors with burner should be tightly closed during automatic operation of the controller.
NOTE! Temperature on the boiler should not be set below 57°C! It increases a risk of occurrence of a "dew point" what considerably low-temperature corrosion in the heat below 57°C with simultaneous use of incorrect solid fuels leads to accelerated wear and tear of the boiler and decreases its efficiency exchanger. Maintaining temperature of feeding water.

Whole combustion process will be controlled by the controller when the boiler is fired up (see Controller User's Manual), maintaining the set temperature of water in the boiler and taking into account building demand for heat.

4.3.1. Approximate output parameters of the controller

The controller is pre-configured, but its output parameters are changed, depending on fuel used (eco-pea coal, fine coal, pellet, oats, lignite) and may require individual adjustments. They should be adjusted depending on heat demand, type and quality (calorific value) of fuel or depending on the development of the heating system. Selecting correct parameters ensures economical combustion of fuel.

The most important parameters for the controller, which controls operation of the KSP Duo boiler are: feeding time and break in fuel feeding. Parameters are selected depending on the type of the product.

Fuel	KSP Duo 12			KSP Duo 18			KSP Duo 26			KSP Duo 36			KSP Duo 52		
	a [s]	b [s]	c [%]	a [s]	b [s]	c [%]	a [s]	b [s]	c [%]	a [s]	b [s]	c [%]	a [s]	b [s]	c [%]
Eco-pea	10	40	30	10	32	35	10	26	50	10	20	60	10	15	70
Fine coal	10	42	30	10	35	35	10	30	50	10	22	60	10	14	70
Pellet	10	30	20	10	20	25	15	25	30	15	20	35	15	15	35
Oats	10	30	20	10	20	25	15	25	30	15	20	35	15	15	35

a – feeding time; b – feeding break; c – fan power;

4.4. Refuelling

The container should be refuelled regularly to maintain continuous operation of the boiler. Fuel should be added when the coal layer in the container reaches height min. 30 cm from the bottom of the container - at the latest. Smoke and dust may be emitted from the container in case of too low fuel amounts. If there is no fuel the controller will shutdown whole system and it will be necessary to fire up a boiler. To refuel:

1. Turn off the fan.
2. The open flap of the fuel container.
3. Add fuel to the container.
4. Make sure that there are no contaminants, which can lock operation of the feeder (debris, rocks, parts of wood metal).
5. The close tightly flap of the container.
6. Switch on the fan.

NOTE! During operation of the boiler fuel container should be always tightly closed!

4.5. Stop of boiler operation

1. Switch to manual mode.
2. Turn off the fan and feeder.
3. Switch on the fuel feeder in manual mode for several minutes, taking a considerable amount of fuel out, to remove whole heat from the burner.
4. Switch off controller.
5. Close tightly all doors, flaps, damper on flue to damp the system.
6. After dozen or so minutes check whether the fuel has not reignited.
7. Remove residues of coal and ash from the boiler if the heat is completely extinguished.
8. Remove remaining fuel from the container and feeder.

4.6. Boiler shutdown when the heating season is finished

To shutdown the boiler after the heating season you should repeat operations listed in the *Stop of boiler operation* and then:

1. Remove fuel from container and feeder.
2. The clean whole boiler from inside, flue gas ducts and chimney.
3. Leave open doors and lifted the cover of fuel container during standstill of the boiler to dry boiler interior and ensure continuous air flow.
4. Commission execution of inspection of boiler condition.

NOTE! Do not drain the water from boiler and heating system when the heating season is finished or during breaks in heating (except time necessary for possible repairs). It protects boiler against accelerated corrosion. However, it is necessary to drain the water from the system if break in boiler heating occurs during frosts. It will prevent freezing of water and damage of the system.

4.7. Cleaning and maintenance

Maintaining cleanness of the boiler is a necessary condition for its effective, trouble-free operation. Even small layer of deposit will cause decrease of heat transfer from flue gas and reduces boiler efficiency as a result. It can be also a reason for boiler damage.

Therefore, the boiler should be regularly and precisely cleaned at least once a week. After shutdown and cooling down of the boiler you should: 1. remove ash from combustion chamber and ash-pan, 2. remove soot from combustion chamber and ash-pan using wire brush, 3. after opening of upper and bottom

boiler doors clean smoke tubes and flue gas ducts with a brush, then remove soot from flue gas ducts, 4. remove deposited dust, ash and fuel residues from external casing of the boiler.

Pay attention to tidiness in the boiler room. Any other objects, except these necessary for the operation of the boiler should not be stored there.

Take care of the good condition of the boiler and hydraulic system:

- Check, and tighten screws fixing the motoreducer and fuel container, from time to time.
- Periodically check the tightness of the water system and tightness of doors of the boiler, flue and chimney. Replace a gasket in boiler and doors if necessary.
- Periodical inspections should be performed once per year during standstill of the boiler.
- To execute inspection of the boiler and establish a scope of possible repairs the boiler should be precisely cleaned from the residues after combustion from the fire side.
- Major repairs of the boiler resulting from the incorrect operation, occurred failures or mechanical damages shall be carried out immediately when they are detected by the producer's service.

4.8. Boiler operation in emergency mode

4.8.1. Emergency stop of boiler operation

Boiler should be stopped always in case of: 1. water leak from the boiler, 2. temperature increase over 90°C or 3. necessity to refill evaporated water in the system and heaters.

To stop operation of the boiler you should carry out operations listed in point *Stop of boiler operation*. If it is necessary to stop the boiler more quickly you should take out heat from igniter using a metal shovel to a metal container, remove heat to the outside and extinguish it with water there.

NOTE! Do not extinguish glowing fuel with water in the boiler room!

4.8.2. Emergency firing up of the KSP Duo boiler

In case of long-term power stoppage or failure of the control system the KSP Duo boiler should be equipped with a fixed water-cooled grate. To fire it up you should:

1. Open central and bottom doors.
2. Place pieces of wood on the water-cooled grate, fire them up and then add fuel.
3. Open damper in the flue to the maximum extent.

The water-cooled grate can be used during every-day operation of the boiler but it is connected with a necessity to add fuel more often and to control parameters more precisely. Operation of the boiler on a water-cooled grate results in a decrease of efficiency and power of the boiler.

5. BOILER OPERATION DISTURBANCES – BEFORE CALLING THE SERVICE

The customer will bear the costs of travel and work of the sere technician in case of the unjustified calling of producer's service. Therefore, before you call the producer's service please read the section concerning the most often occurring disturbances in boiler operation and methods of dealing with them.

Symptom	Cause	Repair
Smoking outwards	insufficient chimney draught	remove leaks in chimney, flue or boiler doors
	insufficient chimney height	lift chimney to height min. 1.5 m over roof ridge
	too small chimney's intersection	adjust damper of the flue, decrease blowing force
	very low atmospheric pressure	use fan supporting chimney draught
	contamination of chimney flue	clean ducts
Low thermal efficiency of the boiler	combustion of low heat fuel	replace fuel with high heat fuel
	no supply of air to the boiler-room	facilitate correct air supply through the window or air supply duct
	failure of forced draught fan or controller	re-set parameters in compliance with the user's manual or replace with a new one - in good working
	contamination of gas passes in smoke tubes chamber	clean passes, adjust damper
Moistening and tar deposits inside the boiler (symptoms similar to leak)	use of wood as a primary fuel in the heating process	use fuel recommended by the user's manual
	low temperature maintained in the boiler	use boiler having temp. min. 57°C
Leak	to be assessed by the producer	repair by PEREKO service
Too high chimney's draught	—	adjust chimney draught with a damper in boiler flue
Fuel suspends in the container	Too moist fuel	Remove fuel from the container and dry it
Fuel does not evacuate from the container	ruptured protection of feeder's split pin	remove item jamming the endless screw and insert new split pin
Screw-conveyor feeder does not start	no supply	check supply
	controller switched off	check the main switch of the controller
	switch on motor	check switch on motor

Symptom	Cause	Repair
Smoking from container	incorrect setting of fuel feeding time	set correctly the time for fuel feeding on the controller
	moist fuel	check and dry the fuel
	the leaky flap of container	replace a gasket
Too high fuel consumption	incorrect setting of parameters	the assistance of the producer's
	bad quality of fuel	replace fuel
Fuel does not burn completely	too short time between fuel feeding	set the correct interval between successive fuel feeding
	bad quality of fuel	replace fuel

6. WARRANTY TERMS AND CONDITIONS

1. Envo sp. z o.o. with registered office in Starachowice ul. Radomska 76 is a producer of PEREKO boilers.
2. The warranty card is void without a date, stamp and signatures of the producer, retail outlet and the seller.
3. Copies shall not be issued if the warranty card is lost.
4. The warranty card or purchase invoice is the only documents authorising the purchaser for free warranty repair.
5. The beginning of the warranty period for the PEREKO boiler is the date of purchase confirmed by a proof of purchase.
6. The producer provides a warranty for the operation of the heat exchanger for 60 months and 24 months for the components.
7. The producer provides a warranty for tightness of welding connections for 10 years.
8. Warranty for tightness of welding joints is not synonymous with warranty for tightness of the whole boiler and is applicable in case of leaks only on welding joints.
9. The producer reserves the right to make improvements or modifications without prior notice.
10. The warranty is prolonged by a period from the date of the notice of boiler repair to the date of its execution. Execution of the repair is confirmed in the warranty card and report from visit intended for removal of fault.
11. The producer will consider the claim within 14 days from the date of the notice.
12. During the warranty period the boiler can be replaced with a new one if the Producer (based on the decision of the authorized expert) decides it cannot be repaired.
13. Quality claims concerning the boiler should be made in sales location or directly to the producer.
14. The warranty does not cover boiler connection, clamping grips, heat doors, sealing cord located in the external doors and tools for servicing and cleaning.
15. Warranty for electronic temperature controller (regulator), fan and automatic coal feeding system is provided by their producer and it is enclosed to set of boiler documents.
16. The user shall bear the costs of travel and work of the service technicians in case of unjustified claim and groundless calling the producer's service.

17. The above manual for the feeder boilers is the property or ENVO sp. z o.o. It should not be copied and use by the other economic entity or natural person without written consent from the owner. All rights reserved.

NOTE! The producer does not accept any liability for effects of incorrect installation, incorrect operation of the boiler, non-observance of the recommendations included in the user's manual or incorrect maintenance of the equipment.

The warranty becomes void in case of:

1. Use of protections incompatible with PN-91/B-02413.
2. Incorrect connection in closed system acc. to the Journal of Laws of 2009, no. 56 item 461.
3. Incorrect transport and storage of the boiler.
4. Starting the boiler without sufficient amount of water.
5. Damages resulting from overheating of the boiler.
6. Repairs during the warranty period by person and companies without authorization from the producer.
7. Damages resulting from non-observance of assumptions contained in the manual.
8. Exceeding allowable working pressure 1.5 bar.
9. Mechanical damages or intervention in the boiler structure by non-authorized persons.
10. Corrosion of steel components resulting from maintaining too low temperature of water - below 57°C with simultaneous use of incorrect, moist fuel.

SERVICE ASSISTANCE

Date	Comments	Signature

WARRANTY CARD

for hot water heating boiler used in the central heating system

Serial number .....

Type .....

Production date .....

QC mark .....

Warranty for tightness of welding connections of water casing in the boiler is provided for 10 years, 60 months for tightness of the heat exchanger and 24 months for the other components.

The beginning of the warranty period for the PEREKO boiler is the date of purchase confirmed by a proof of purchase.

..... Sign and stamp of the producer

..... Date of retail sale

..... Sign and stamp of commercial unit

08-12-2017 02.52

Producer:

Envo sp. z o.o.,

27-200 Starachowice, ul. Radomska 76, POLAND

www.grupaenvo.pl

Technical support

tel. +48 (41) 274 53 53, fax +48 (41) 274 53 26

e-mail: serwis@pereko.pl,

mobile +48 602 315 512, 604 953 459, 660 726 577

www.pereko.pl

Boiler regulator

ecoMAX 910R1

FOR SOLID FUEL BOILERS

*

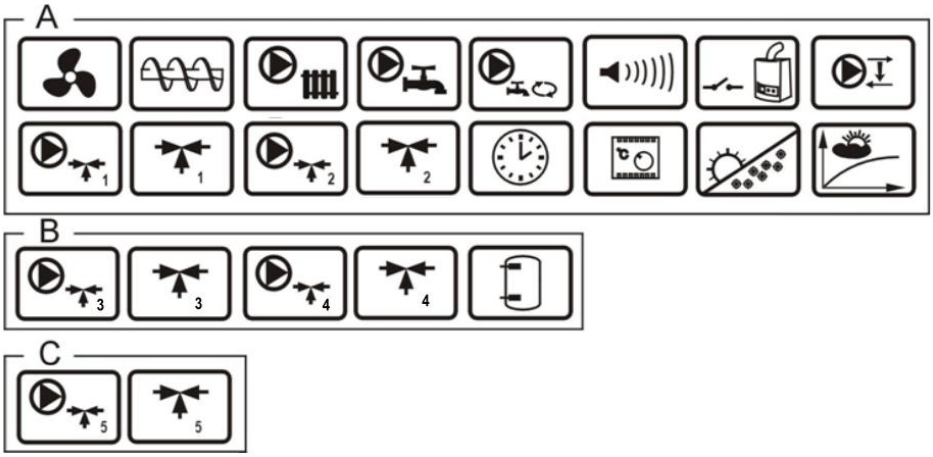

A, B, C – functions chich are available in module, respectively: A, B, C

* room panel ecoSTER200/ecoSTER TOUCH (module B, C and ecoSTER200 are not part of standard equipment)

SERVICE AND ASSEMBLY MANUAL

ISSUE: 1.2

SOFTWAREE:	MODULE	PANEL
	v.01.XX.XX	v.01.XX.XX

11-2015

PRINCIPLES FOR USAGE OF Individual Fuzzy Logic CONTROLLED BOILER:

- **The regulator must be programmed individually for the given type of boiler and fuel.**

- **It is inadmissible to change the type of gear-motor, fan, and to make other changes in the boiler fittings which can influence the burning process. The fittings should correspond to the components installed by the manufacturer.**

- **It is recommended to operate boiler with maximally-opened fan flap.**

- **Activation of the fuzzy logic mode does not eliminate the necessity of regulating the SUPERVISION parameters.**

- **In some cases, the fuzzy logic mode may require additional adjustment.**

TABLE OF CONTENTS

1 Safety requirements

⚠ Requirements concerning safety are described in detail in individual chapters of this manual. Apart from them, the following requirements should in particular be observed.

- Before starting assembly, repairs or maintenance, as well as during any connection works, please make sure that the mains power supply is disconnected and that terminals and electric wires are devoid of voltage.
- After the regulator is turned off using the keyboard, dangerous voltage still can occur on its terminals. The regulator cannot be misused.
- The regulator is designed to be enclosed.
- Additional automatics which protect the boiler, central heating (CH) system, and domestic hot water system against results of malfunction of the regulator, or of errors in its software, should be applied.
- Choose the value of the programmed parameters accordingly to the given type of boiler and fuel, taking into consideration all the operational conditions of the system. Incorrect selection of the parameters can cause malfunction of the boiler (e.g. overheating of the boiler, the flame going back to the fuel feeder, etc.),
- The regulator is intended for boiler manufacturers. Before applying the regulator, a boiler manufacturer should check if the regulator's mating with the given boiler type is proper, and whether it can cause danger.
- The regulator is not an intrinsically safe device, which means that in the case of malfunction it can be the source of a spark or high temperature, which in the presence of flammable dusts or liquids can cause fire or explosion. Thus, the regulator should be separated from flammable dusts and gases, e.g. by means of an appropriate body.
- The regulator must be installed by a boiler manufacturer in accordance with the applicable safety standards.
- The programmed parameters should only be altered by a person familiarized with this manual.
- The device should only be used in heating systems in accordance with the applicable regulations.
- The electric system in which the regulator operates must be protected by means of a fuse, selected appropriately to the applied loads.
- The regulator cannot be used if its casing is damaged.
- In no circumstances can the design of the regulator be modified.
- In the regulator there is applied electronic disconnection of connected devices (2Y type of operation according to PN-EN 60730-1) as well as micro-disconnection (2B type of operation according to PN-EN 60730-1).
- Keep the regulator out of reach of children.

2 General information

Boiler regulator ecoMAX910R1, is a modern electronic device intended to control pellet boiler operation. The regulator is a multipurpose device:

- it automatically maintains a preset boiler temperature by controlling the fuel combustion process,
- it controls timing of feeding screw and fan,
- it automatically stabilizes a preset temperature of the domestic hot water tank,
- it automatically maintains preset temperature of several independent mixer heating cycles.

The preset temperature of heating cycles and the boiler can be set on the basis of a weather sensor readouts. The regulator features an Individual Fuzzy Logic function. It allows to optimize the combustion process, which is in favour of natural preservation, decreases fuel consumption and relieves the user of the necessity of adjusting the burner parameters.

The device includes: the control panel with horizontal regulation of its position, the main operating unit and optional modules to control additional heating circuits.

Regulator can cooperate with an additional control panel situated in living quarters.

It can be used in a household and similar facilities, as well as in lightly industrialized facilities.

3 Information about documentation

The regulator manual is a supplement for the boiler manual. In particular, except for this manual, the boiler manual should also be observed. The regulator manual is divided into two parts: for user and fitter. Yet, both parts contain important information, significant for safety issues, hence the user should read both parts of the manual.

We are not responsible for any damages caused by failure to observe these instructions.

4 Storage of documentation

This assembly and operation manual, as well as any other applicable documentation, should be stored diligently, so that it was available at any time. In the case of removal or sale of the device, the attached documentation should be handed over to the new user / owner.

5 Applied symbols

In this manual the following graphic symbols are used:

- useful information and tips,

- important information, failure to observe these can cause damage of property, threat for human and household animal health and life.

The symbols indicate important information, in order to make the manual more lucid. Yet, this does not exempt the user from the obligation to comply with requirements which are not marked with a graphic symbol.

6 Directive WEEE 2002/96/EG

Act on electrical and electronic equipment

- Recycle the product and the packaging at the end of the operational use period in an appropriate manner.
- Do not dispose of the product together with normal waste.
- Do not burn the product.

REGULATOR INSTRUCTION MANUAL

ecoMAX 910R1

7 Operating the regulator

The regulator turns on by pressing the knob. To start the use of boiler, fire up the boiler using the FIRING UP operation mode, then change the operation mode to OPERATION.

7.1 Buttons description

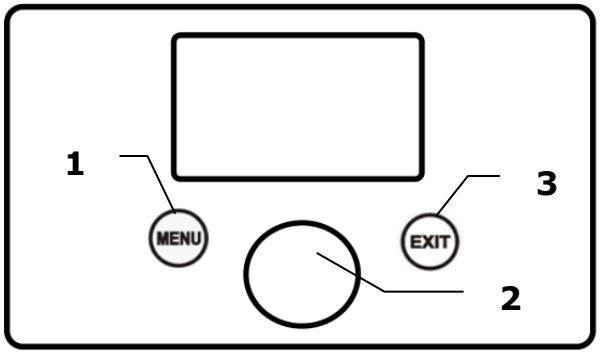

1. MENU button
2. ,,TOUCH and PLAY" knob
3. przycisk EXIT

Turning the "TOUCH and PLAY" knob increases or decreased the edited parameter. Pushing this knob allows to enter the given parameter, or to confirm the selected value.

7.2 Main screen

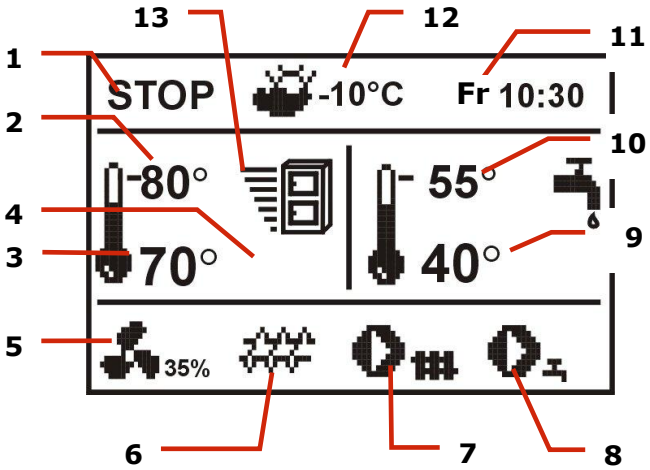

1. Regulator operation modes: STOP, FIRING UP, OPERATION, SUPERVISION
2. preset boiler temperature,
3. measured boiler temperature,
4. field of factors influencing preset boiler temperature

- symbol of decreasing preset boiler temperature from opening of room thermostat contacts;

- Preset boiler temperature decrease due to thermostat disconnection (room temperature is reached);

- Preset boiler temperature decrease due to activated time spans;

–Boiler preset temperature during loading the domestic hot water tank (DHW);

–Boiler preset temperature increase from mixer circulation;

–weather control switch on for boiler circulation,

–warning, HUW disinfection mode is active,

– 4-way valve partially closed (active return protection),

5. fan operation symbol,
6. fuel feeder operation symbol,
7. central heating pump operations symbol,
8. domestic hot water pump operation symbol,
9. measured temperature of domestic hot water tank,
10. preset temperature of domestic hot water tank,
11. clock and day of the week
12. outside (weather) temperature
13. current boiler output level.

Right window on the main screen is customizable, the user can decide what information is to be presented there. It is possible to choose setup presenting info of HUW by rotating the TOUCH and PLAY knob.

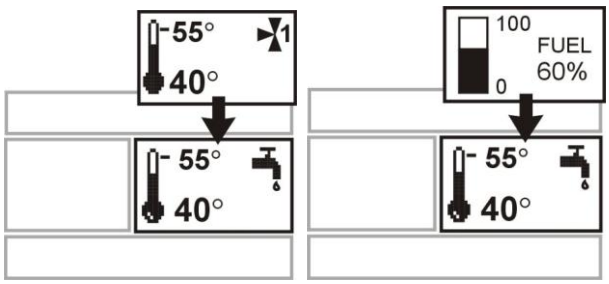

Fuel level can be also shown in the room panel ecoSTER200/ecoSTER TOUCH.

7.3 Setting the preset boiler temperature

Set the preset boiler temperature in:

MENU → Boiler settings → *Preset boiler temperature*

Note: Preset boiler temperature will be automatically increased to enable filling HUW container and heating circuits of mixers, if required.

7.4 STOP

Upon start-up the regulator remains in STOP mode. To activate STOP mode press the knob on main screen.

Upon activation of STOP mode, the boiler burner is OFF, while hydraulic system remains in normal operation.

7.5 FIRING UP

To activate FIRING-UP mode - press the knob and select FIRING-UP. This mode enables to control manually fan and fuel feeder. Follow strictly the instructions of the boiler manufacturer when firing-up the boiler.

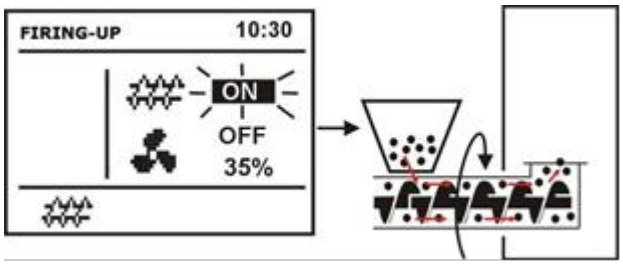

The feeder starts once the knob has been pressed on a feeder symbol. Feed such amount of fuel so that it appears at the end of retort. Press the knob again to stop the feeder, and put firelighter (e.g. barbecue kindling-fuel) below the fuel layer and fire it.

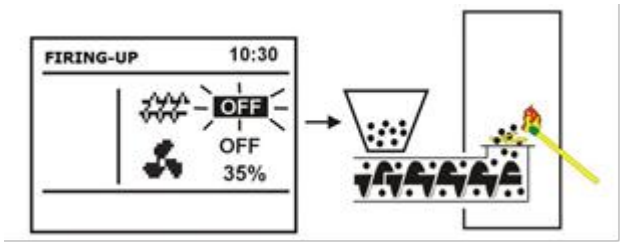

Press the knob once on a fan symbol to start the fan and press again to stop it. Fire the fuel supplied, and feed next fuel dose, if required.

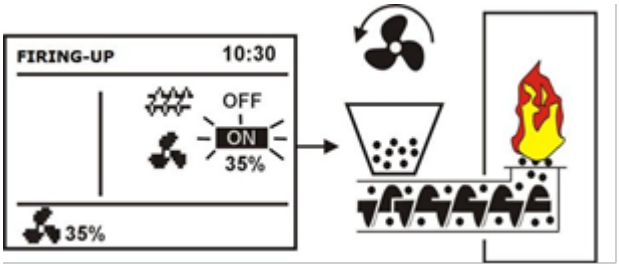

Manual feeder start-up

Once you have made sure fire in the furnace is properly kindled - stop the fan and the feeder and press EXIT to leave FIRING-UP mode. Now, the regulator enters OPERATION mode and the word OPERATION appears in the left upper corner. Regulator starts to work in automatic cycle.

☞ If the user does not switch-over the regulator to OPERATION mode, the regulator will heat-up the boiler to *preset temperature* + 10°C, and will automatically enter OPERATION mode, and subsequently SUPERVISION because the preset boiler temperature has been reached.

☞ In case actual boiler temperature is higher than *its preset value* + 10°C, FIRING -UP mode is inaccessible. In such a case wait until the boiler cools down.

7.6 OPERATION – STANDARD mode

The regulator offers two modes of boiler burner control:

- *Standard* mode – without output modulation (described in this chapter),

- *Fuzzy logic* mode - with output modulation[1].

To activate *Standard* mode - click: **MENU → Boiler Settings → Burner Settings → Regulation mode** and Standard. This option

[1] Fuzzy Logic mode of regulator operation has to be activated - see sec. 21.1

is not available for regulators, which are provided with STANDARD mode of operation only.

In *Standard* mode the regulator operates in automatic cycle with parameters preset by the user. The preset values are available in: **MENU → Boiler Settings → Burner Settings**.

The fan works continuously with constant blow-in output preset in the parameter *Blow-in Output*. The feeder starts periodically and remains in operation for the duration set in *Feeding Time,* then it stops and remains off over the time set in *Feeder Interval*.

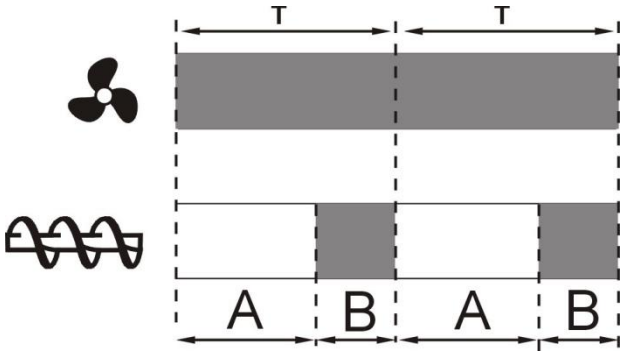

Cycles of Blow-In and Feeder operation in OPERATION mode; A – Feeder Interval, B – Feeding Time.

These parameters should be properly selected subject to boiler output, and fuel type and quality. Usually, they are factory set by the boiler manufacturer.

As the factory settings do not always comply with the given boiler type, they should be adapted to the given boiler and fuel type.

Burner adjustment instruction:
- set the parameters: *Feeding Time* and *Feeder Interval* so that the required boiler output (e.g. 15kW) has been reached. Boiler power is displayed in MENU → Information ,

- select the proper *blow-in output* to the set fuel stream.

Note: boiler power will be properly displayed provided that the values of service parameters: *Feeder Efficiency* and *Energy Density* have been properly entered!

Feeding Time- OPERAT and Feeder Interval- OPERAT should be so selected that the furnace does not retrace to the fuel feeder.

Once the preset boiler temperature has been achieved, the regulator automatically enters SUPERVISION mode.

7.7 OPERATION–Fuzzy Logic mode

Upon change of boiler regulation mode from *Standard to Fuzzy Logic,* regulator works in OPERATION mode and modulates the boiler output to achieve constant preset boiler temperature.
Fuzzy logic regulation mode may be set in: **MENU → Boiler Settings → Burner Settings → Regulation Mode**
Please note that *Fuzzy Logic* program is adapted individually to the given boiler and fuel type and may work properly only with this boiler and fuel. Therefore, the *Fuzzy Logic* mode requires special settings and has to be activated by the boiler manufacturer in accordance with sec. 21.1. In case this mode has not been activated, it will not be available.

Fuzzy Logic correction

In some instances, Fuzzy Logic mode has to be adjusted to the fuel quality. To make the correction, use the following parameters: *FL fuel correction* and *FL airfl. correction* which are available in:

MENU → Boiler Settings → Burner Settings.
At first adjust the *FL fuel correction.* If fuel is of poor quality and incompletely burnt fuel particles are present in ash, reduce the rate of supplied fuel; in the contrary case - proceed in analogical manner.
Note: incompletely burnt fuel particles or lowered furnace may be also caused by improper boiler operation in SUPERVISION mode. Therefore, prior to correcting *Fuzzy logic* it is recommended to adjust parameters of SUPERVISION mode in accordance with sec.7.8.

Activation of the *Fuzzy Logic* mode does not release from the requirement to adjust the parameters of SUPERVISION mode – risk of screw feeder damage.

Switching off output modulation in Fuzzy Logic

In case the regulator works in SUMMER mode of operation or with a little heat demand (in Spring and Autumn), modulation of boiler output is not justified. To switch-off the boiler output modulation in *Fuzzy Logic* mode of regulation - set both parameters: *Min. boiler output FL* and Max. boiler output FL at the same value - e.g. 80%. The boiler starts operation without output modulation and upon achievement of preset temperature enters SUPERVISION mode.

Boiler output in *Fuzzy Logic*

In case of boiler operation in conditions of little heat demand, fuel consumption may increase. It is a result of the fact that the output modulation algorithm reduces boiler output to the minimum, at which boiler efficiency is much lower than in case of the rated output. In such instances, it is recommended to reduce permitted range of boiler output so that it will not work at the minimum output. The range of boiler output is defined by the parameters: *Min.boiler output FL* and *Max.boiler output FL* available in: **MENU → Boiler Settings → Burner Settings**.

E.g.:

Min.boiler output FL=40% (factory setting: 0%)

Max.boiler output FL=100% (factory setting: 100%)

7.8 SUPERVISION

SUPERVISION mode is available for both modes of regulation: with manual and automatic settings (*Fuzzy Logic)*. Regulator automatically enters SUPERVISION mode without any user's intervention, namely:

- in case of *Standard* mode of regulation– upon achievement of boiler preset temperature,
- in case of *Fuzzy logic* – once actual temperature has exceeded the boiler preset temperature by 5°C.

In SUPERVISION mode, the regulator supervises that the fire in the furnace has not damped. For this purpose, the fan and the feeder work intermittently and operate for a certain time, less frequently than in OPERATION mode. This does not cause any further temperature increase.

The fan does not work continuously, and is switched on along with the fuel feeder periodically, which prevents fire damping in the furnace during boiler shut-down.

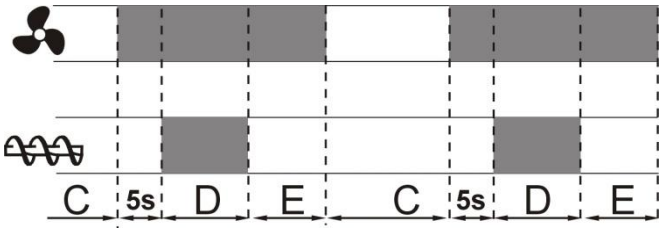

Cycles of fan and feeder operation in SUPERVISION mode; C – *Feeder Interval - Superv.* , D – *Feeding Time-Superv.*, E – *Blow-in operation extending- Superv*.

Duration of break in fan and feeder operation is defined by the parameter: *Feeder Interval - Superv.*, which is available in:

MENU → Boiler Settings → Burner Settings .

This time should be set in accordance with the recommendations of the boiler manufacturer, and so selected that (i) the furnace does not lower during boiler shut-down and (i) the time is sufficient to prevent increase of the boiler temperature. Other parameters are available in:

MENU → Service Settings → Boiler Settings → Burner Settings

Parameters related with the SUPERVISION mode should be so selected that the boiler temperature in this mode gradually drops. Improper settings may cause boiler overheating or flash back to the feeder.

The regulator returns to the OPERATION mode once actual boiler temperature has achieved preset value less boiler hysteresis.

Examples of the SUPERVISION mode settings (fuel: hard coal):

- *Feeder Interval - Superv.* = 15-30min.
- *Feeding Time-Superv.* = 12s,
- *Blow-in operation extending- Superv.* = 1s,
- *Blow-In Output - Superv.* = 25%.

7.9 Selection of fuel

The fuel selection is available only in case the boiler manufacturer has memorized various types of fuel. The type of fuel may be

set in: **MENU → Boiler Settings → Burner Settings** .

7.10 HUW settings

The equipment controls the temperature of HUW container if a HUW temperature sensor is connected. Using the parameter of *HUW pump mode* the user can:

- switch-off HUW container filling by setting this parameter at ***OFF***,
- set HUW priority (***Priority*** parameter)– boiler pump is OFF and mixer closed to fill HUW water faster.
- set simultaneous (parallel) operation of HUW and boiler pumps using the parameter ***"No priority"***

7.11 Setting the preset HUW temperature

Preset HUW temperature may be set in:

MENU → HUW settings

7.12 Activation of SUMMER function

To activate the SUMMER function, which allows filling the HUW container in summer without having to heat up the central heating system, set the parameter SUMMER mode.

MENU → HUW settings

In the SUMMER mode, all heat recipients may be OFF, therefore, make sure the boiler will not be overheated.

If a weather sensor is connected, the SUMMER function may be automatically activated using the parameters: AUTO Summer mode, SUMMER switch-on temperature and SUMMER switch-off temperature.

7.13 Disinfection of HUW container

The regulator has a function of automatic, periodic heating of the HUW container to 70 °C to eliminate bacterial flora from the HUW container.

Keep the tenants informed of activating disinfection function as there is a risk of being burnt with hot utility water.

Once a week on Sunday at 2:00 A.M the regulator rises the HUW container temperature to 70 °C. Do not turn on the disinfection function while support of HUW is turned off.

7.14 Mixer circle settings

Settings of the first mixer circle are in the menu:

MENU → Mixer 1,2,3,4,5 settings

<u>Mixer settings (without weather sensor)</u>

It is required to set manually desired temperature in mixer's heating circle using parameter *Preset mixer temperature,* e.g. 50 °C degrees. Such should be a value to provide required room temperature.

After connecting a room thermostat, value of decline in preset mixer temperature from thermostat should be set (parameters *mixer room thermostat* e.g. 5 °C degrees). This value should be chosen experimentally. A room thermostat can be a traditional one or a room panel ecoSTER200. After activating the thermostat, mixer preset temperature will be reduced. When this value is reduced correctly then room temperature increase will be stopped.

<u>Mixer with weather sensor setting (without room panel ecoSTER200)</u>

Set the parameter *mixer weather control* in position on. Adjust a weather curve according to point 7.15.

Using the parameter *paralel curve movement* set required room temperature according to a formula:

Required room temperature = 20°C + heating curve paralel movement.

Example.

To reach room temperature 25°C value of heating curve movement must be set for 5°C. To reach room temperature 18°C value of heating curve parallel movement must be set for -2°C.

In this configuration a thermostat can be connected. It will level inaccuracy of the heating curve adjustment in case when its value will be too big. In such case value of decrease of preset mixer room temperature from thermostat should be set i.e. for 2°C. After disconnecting thermostat connectors preset mixer cycle temperature will be reduced. By correct adjustment of this reduction will stop temperature increase of temperature in heated room.

Mixer with weather sensor and room panel ecoSTER200 settings

Set the parameter *Mixer weather control* in position off.
Adjust weather curve according to the point 7.15
The ecoSTER200 controller automatically moves the heating curve depending on preset room temperature. The controller relates adjustments to 20°C degrees, i.e. for preset room temperature = 22°C degrees the controller will move heating curve by 2°C degrees, for preset room temperature = 18°C degrees the controller will move heating curve by -2°C degrees. In some cases described in the point 7.15 it can be necessary to adjust heating curve movement.
In this configuration the room thermostat ecoSTER is able to:
reduce temperature of heating cycle by a constant value, when preset temperature in a room will be reached. Similarly like it was described in the previous point (not recommended), or automatically, constantly correct heating cycle temperature.
It is not recommended to use both these possibilities at the same time.

Automatic correction of a room temperature is done according to formula:
Correction = (preset room temperature – measured room temperature) x room temperature factor / 10
Example.
Preset temperature in heating room (set in the ecoSTER200) = 22°C degrees. Measured temperature in room (using the ecoSTER200) = 20°C degrees, *room temperature factor* = 15.
Preset mixer temperature will be increased by (22°C degrees – 20°C degrees) x 15/10 = 3°C degrees. Correct value of the parameter *room temperature factor* should be adjusted. Scope: 0…50. The bigger value of the factor the bigger correction of preset boiler temperature factor. When set on value "0" preset mixer temperature is not corrected. Attention: setting too high value of room temperature factor may cause cyclic room temperature fluctuations.

7.15 Weather control

Weather control may be activated for both, boiler and mixer circuits. Once the heating curve has been properly selected, preset boiler or mixer temperature is automatically computed on the basis of ambient temperature. Owing to this feature, if the heating curve is properly selected for the given building, in-door temperature will remain constant irrespective of the out-door temperature. Therefore, proper selection of heating curve is essential.

Note: when identifying the heating curve - eliminate influence of the room thermostat on regulator operation (irrespective whether the room thermostat is connected or not) by setting the parameter:

- For mixer circuit: **MENU** → **Mixer Settings** → **Room thermostat** → ***Reduce preset mixer temperature to thermostat*** = 0.
- For boiler circuit: **MENU** → **Boiler Settings** → **Room thermostat** → ***Reduce preset mixer temperature to thermostat*** = 0.

In case of the connected ecoSTER200 room control panel - additionally, set the parameter: Room temperature coefficient = 0.

Guidelines for proper settings of heating curve :

- underfloor heating 0.2 -0.6
- radiator heating 1.0 - 1.6
- boiler 1.8 - 4

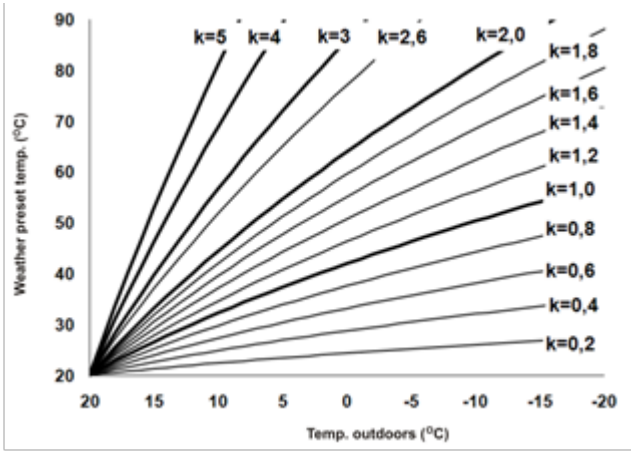

For choosing proper heating curve:

- If by falling outer temperature room temperature is increasing, then value of chosen heating curve is too big,
- If by decreasing outer temperature, room temperature is also decreasing, then value of chosen heating curve is too low,
- If by frosty weather room temperature is appropriate and in warmer time is too low – it is recommended to increase parameter *heating curve parallel shift* and then choose lower heating curve.
- If by frosty weather room temperature is too low and in warmer time too high – it is recommended to reduce *parameter heating curve parallel shift* and choose higher heating curve.

Buildings which are poorly isolated require setting heating curve with higher values, and for better isolated buildings heating curve will have a lower value.

Preset temperature, counted according to heating curve can be decreased or increased by controller when it goes beyond scope of limits of temperatures for given cycle.

7.16 Description of night time decrease settings

The regulator offers possibility to select the time intervals for boiler, heating circuits, HUW container and HUW circulating pump, at which lower preset temperature may be set e.g. for a night time or when the user is not at home (e.g. he/she left for work). This feature enables automatic reduction of preset temperature, which improves heat comfort and reduces fuel consumption. It is indicated with a sign ↓🕒. Select temperature reduction and beginning and end of respective time interval.

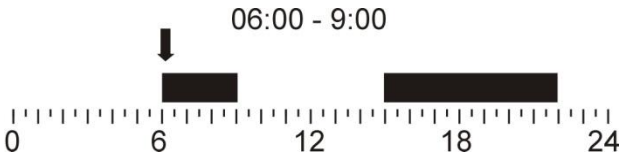

Time intervals

7.17 Control of HUW circulating pump

Settings of HUW circulation are available in:

MENU → Circulating Pump

HUW circulating pump enables quick delivery of hot utility water to rooms located far away from HUW container without a need to drain off the water. Time-based control settings of circulating pump are analogical to the settings of night time decrease. In the defined time intervals designated as ☼ circulating pump will start and remain in operation for the period of time set in *Circulating Pump Operation Time* , then will stop and remain out of operation for the period of time set in *Circulating pump standstill time*. The circulating pump does not operate in the time intervals designated as ☾ To keep the pump in continuous operation, set all time intervals within the whole day (24 hours) at ☼ and the parameter *Circulating pump standstill time* = 0.

Switch on the operation of circulating pump using the parameter: ***HUW Circulation Support*** **in MENU → Pump Service Settings**.

7.18 Grate

In case the boiler is adapted to burn fuel on additional grate, the feeder or the fan with the feeder may be switched off. The settings are available in: **MENU → Boiler Settings** .

Note: When the fan goes OFF, the same time the feeder stops.

7.19 Manual control

The regulator offers possibility to manual start of working equipment such like a pump, a feeder motor or a fan. This feature enables checking whether the equipment is fault-free and properly connected.

Note: Long-term operation of the fan, the feeder or other working equipment may lead to occurrence of hazardous conditions.

Item: **Mix 1 close/Circul** means the mixer servo is closed (if used), or - in case it is not used i.e. the service parameter *Mixer support* is set at *OFF* or at "*Pump only* " it means the circulating pump connected to terminals 14-15 is running.

7.20 Fuel level configuration

Fuel level indicator activating

To activate displaying fuel level following parameters are to be set :
MENU → Boiler setting → Fuel level → alarm level

Twisting the "TOUCH and PLAY" knob in the main screen calls out fuel level window.
Tip: fuel level can also be seen in room panel ecoSTER200

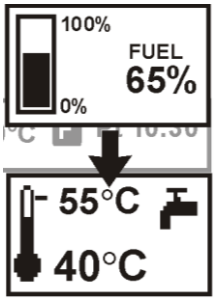

Fuel level indicator service
Each time when fuel silo is filled to required level it is necessary to press and keep the knob in main window. Following info will appear:

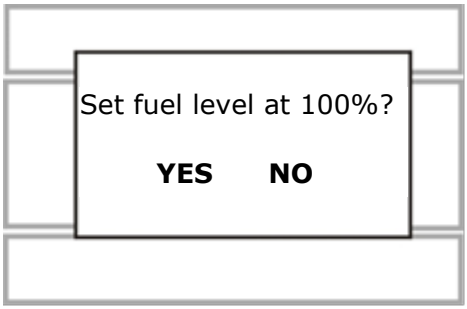

Once YES has been selected and confirmed, fuel level is set at 100%. Fuel may be replenished at any time without a need to wait for complete empty fuel tank. Replenish fuel always to the level corresponding to 100% and confirm achieved 100% level by keeping the knob pressed for a while!

Description of activity

The controller measured fuel level on the basis of its current consumption. Factory settings will not always correspond to the actual fuel consumption, so to work correctly this method needs level calibration by the user of the controller. No additional fuel sensors are required.

Calibration

If the service parameters of the boiler: *Feeder Efficiency* and *Tank Capacity* are properly set, calibration is not necessary – the regulator should properly calculate fuel level.
But, if the fuel level calculations are wrong, calibration has to be performed. For this purpose, fill the fuel tank to the level corresponding to its full load and set the parameter *Fuel level calibration* at 100%. This parameter is available in :
MENU → Fuel Level → Fuel level calibration.
Indicator in the main window is now set at 100%. Pulsating fuel level indicator means calibration process is in progress. The indicator keeps pulsating until minimum fuel level has been set. Check regularly the decreasing fuel level in the tank. Once the level dropped to the minimum - set the value of *Fuel level calibration* at 0%.

Change of the service parameter: *Tank Capacity* cancels the calibration of fuel level - then, the level is calculated on the basis of the parameters: *Feeder Efficiency* and *Tank Capacity*.

USER MANUAL OF CONTROLLER INSTALLATION AND SERVICE SETTINGS

ecoMAX 910R1

8 Hydraulic diagrams

Shown hydraulic schemes do not replace the design of central heating and may be used only for informational purposes.

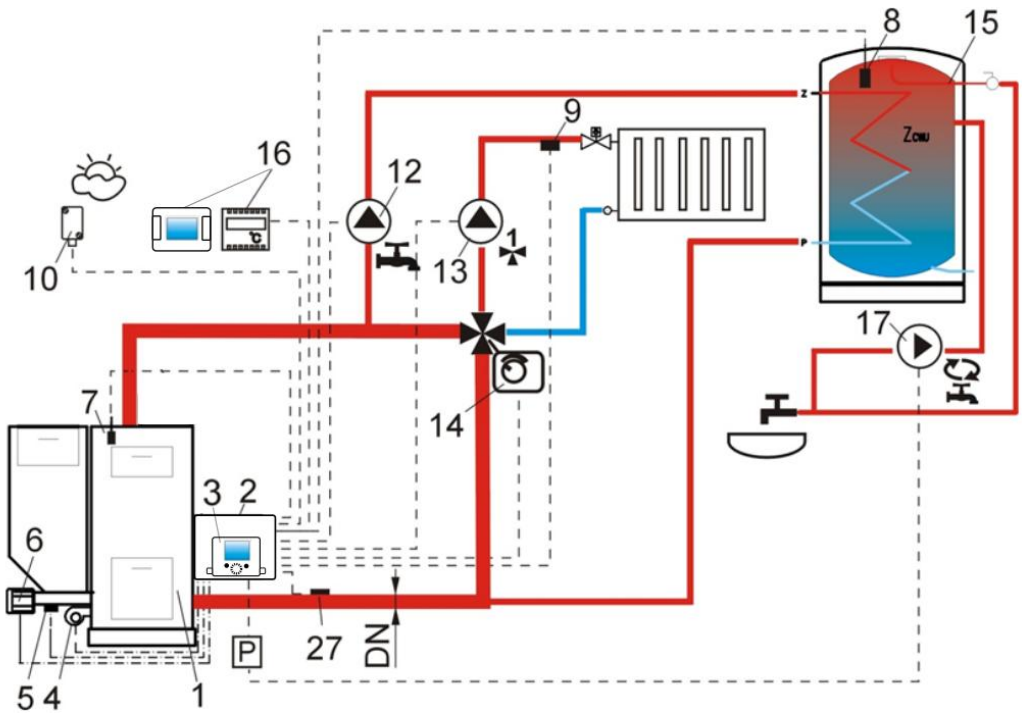

Diagram with 4-way control valve for central heating circuit[3], where: 1 – boiler, 2 – ecoMAXX regulator – module A, 3 – ecoMAXX regulator – control panel, 4 – fan, 5 – feeder temperature sensor, 6 - gear-motor, 7 – boiler temperature sensor, 8 – HUW temperature sensor, 9 - mixer temperature sensor, 10 – temperature (weather) sensor 12 – HUW circuit pump, 13 – mixer circuit pump, 14 –electric servo the valve, 15 – HUW container, 16 – room thermostat or ecoSTER200, 17 – HUW circulating pump, 27 – return temperature sensor (does not affect combustion process control), P – electric relay.

As there is not mechanically forced water flow in boiler return circuit - this method of protection of boiler return circuit from cold water is not efficient. Use of other methods is recommended. To improve water flow in gravitational circuit of the boiler (the circuit is indicated on the diagram with a bold line) it is necessary to: (i) use pipes and 4-way valve of large DN value, (ii) avoid using excessive number of elbows and cross section reductions, and (iii) apply other rules of gravitational circuit construction - e.g. keeping of gradients, etc. In case the return temperature sensor is of contact type - provide the sensor with heat insulation to isolate it from the environment and improve its thermal contact with the pipe by application of thermal paste. Set the preset boiler temperature at so high value that heat output required to the heating circuit and to heat-up return water to the boiler is guaranteed.

RECOMMENDED SETTINGS:

	Parameter	Setting	MENU
	OPERATION mode: Return Protection	ON	Service Settings → Boiler Settings → Return Protection 4D
	Min. return temp	45°C	
	Return temp. hyst.	2°C	
	Valve closing	0%	
	Min. preset boiler temperature	70°C	Service Settings → Boiler Settings
	Mixer support 1	ON CO	Service Settings →Mixer Settings 1
	Max. preset temperature of mixer 1	75°	Service Settings →Mixer Settings 1
	Heating curve. mixer 1	0.8 – 1.4	Service Settings →Mixer Settings 1
	Weather control mix.1	ON	Menu→ Mixer Settings 1
	Output H	Circulating Pump	Menu→ Service Settings
	Circulation support	ON	Menu → Pump Service Settings →

[3] The presented hydraulic diagram does not replace central heating engineering design and may be used for information purposes only.

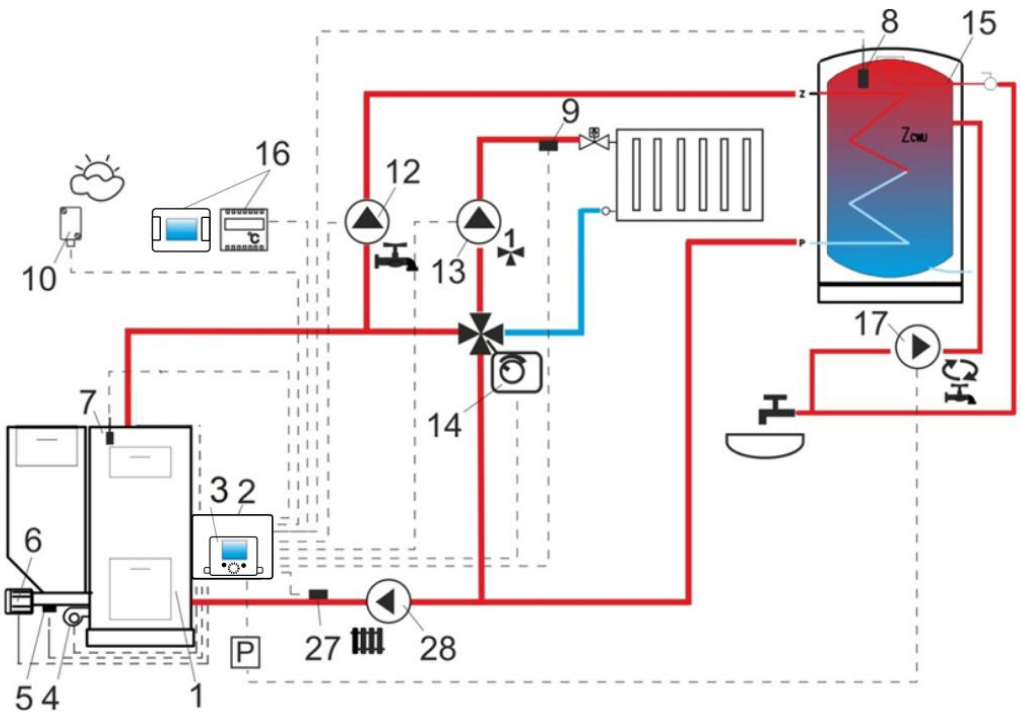

Diagram with 4-way valve and additional pump in the boiler circuit: 1 – boiler, 2 – ecoMAXX regulator – module A, 3 – ecoMAXX regulator – control panel, 4 – fan, 5 – feeder temperature sensor, 6 - gear-motor, 7 – boiler temperature sensor, 8 – HUW temperature sensor, 9 - mixer temperature sensor, 10 – temperature (weather) sensor, 12 – HUW circuit pump, 13 – mixer circuit pump, 14 – electric servo of the valve, 15 – HUW container, 16 – room thermostat or ecoSTER200, 17 – HUW circulating pump, 27 – return temperature sensor (does not affect combustion process control), 28 – boiler pump, P – electric relay.

RECOMMENDED SETTINGS:

	Parameter	Setting	MENU
	OPERATION mode: Return Protection	ON	Service Settings → Boiler Settings → Return Protection 4D
	Min. return temperature	45°C	
	Hysteresis of the return temperature	2°C	
	Valve closing	0%	
	Min. boiler preset temperature	70°C	Service Settings → Mixer Settings
	Mixer support 1	ON CO	Service Settings →Mixer Settings 1
	Max. preset mixer temperature 1	75°	Service Settings →Mixer Settings 1
	Heating curve. mixer 1	0.8 – 1.4	Service Settings →Mixer Settings 1
	Weather control mix. 1	ON	menu→ Mixer Settings 1
	H output	circuit pump	menu→ service Settings
	Circulation support	ON	menu→ service Settings → pump

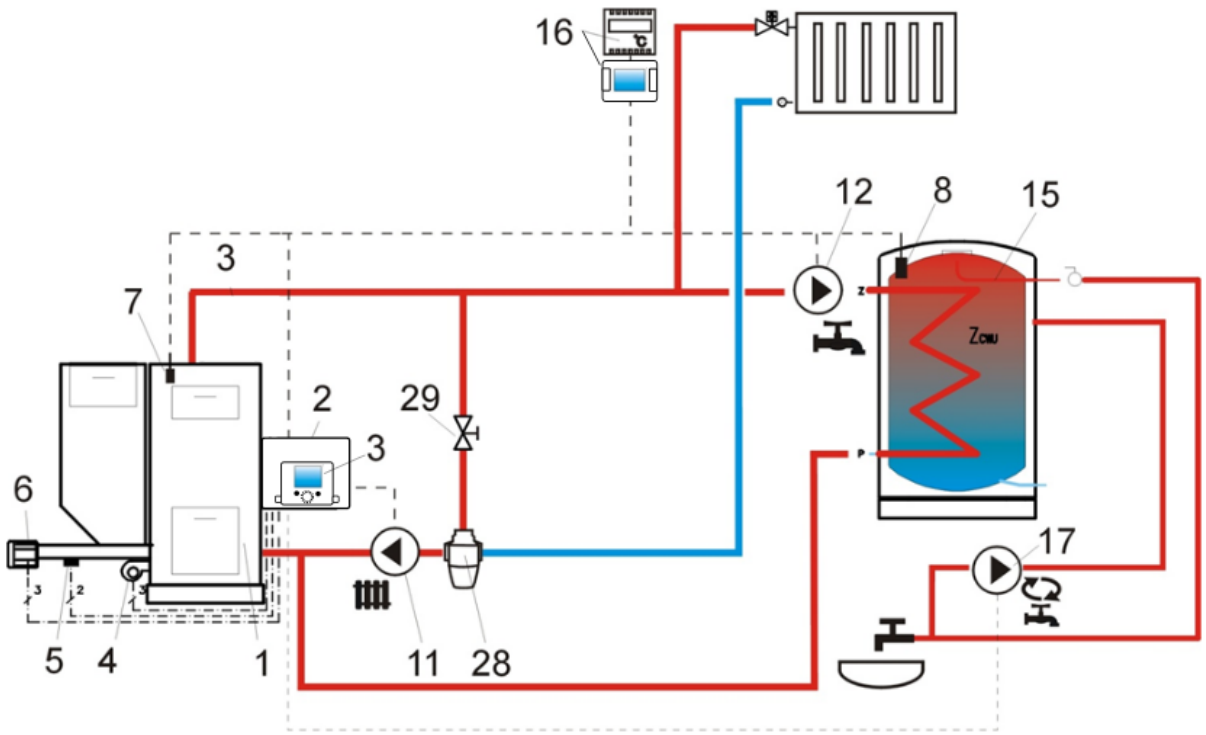

Diagram with 3-way thermostatic valve to secure return water temperature[4], where: 1 – boiler, 2 – ecoMAXX regulator – module A, 3 – ecoMAXX regulator – control panel, 4 – fan, 5 – feeder temperature sensor, 6 - gear-motor, 7 – boiler temperature sensor, 8 – HUW temperature sensor, 9 - mixer temperature sensor, 10 – temperature (weather) sensor, 11 – CH circuit pump, 12 – HUW circuit pump, 13 – mixer circuit pump, 15 – HUW container, 16 – room thermostat or ecoSTER200, 17 – HUW circulating pump, 27 – return temperature sensor (does not affect combustion process control), 28 – thermostatic 3-way valve, 29 – throttle (mushroom) valve.

RECOMMENDED SETTINGS:

	Parameter	**Setting**	**MENU**
	OPERATION mode: Return Protection	OFF	Service Settings → Boiler Settings → Return Protection 4D (if mixer sensor in not provided - this option is not available)
	Mixer support 1	*OFF* or *Pump only*	Service Settings →Mixer Settings 1 (if mixer sensor in not provided - this option is not available)
	Circulation support	ON	Pump Service Settings

[4] The presented hydraulic diagram does not replace central heating engineering design and may be used for information purposes only.

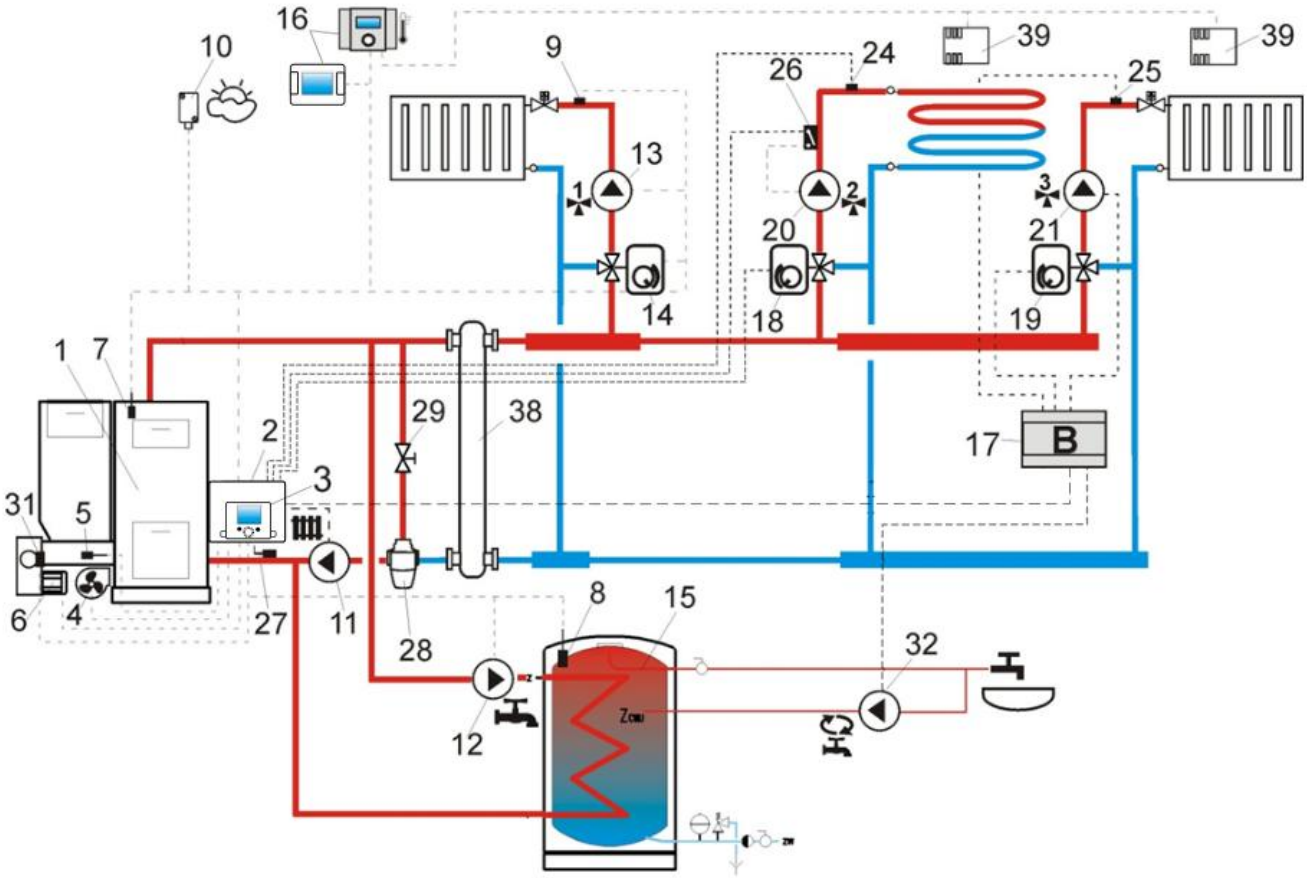

Diagram with two additional mixer circuits upon connection of additional Module B[5], where: 1 – boiler, 2 – ecoMAXX regulator – module A, 3 – ecoMAXX regulator – control panel, 4 – fan, 5 – feeder temperature sensor, 6 - gear-motor, 7 – boiler temperature sensor, 8 – HUW temperature sensor, 9 - mixer 1 temperature sensor, 10 – temperature (weather) sensor, 11 – boiler pump, 12 – HUW circuit pump, 13 – mixer 1 circuit pump 14 – mixer 1 servo, 15 – HUW container, 16 – room thermostat or ecoSTER200, 17 – extension module B, 18 – mixer 2 servo 19 – mixer 3 servo, 20 – mixer 2 pump, 21 – mixer 3 pump, 22 – mixer 2 room thermostat, 23 – mixer 3 room thermostat, 24 – mixer 2 temperature sensor, 25 – mixer 3 temperature sensor, 26 – autonomous thermostat to protect underfloor heating - max. temp. 55°C (it cuts off power supply to the mixer pump once the maximum temperature has been exceeded; thermostat is not included in the regulator supply), 27 – return temperature sensor (recommended mounting location: bottom section of boiler water jacket), 28 – thermostatic 3-way valve (to protect boiler return), 29 - throttle mushroom valve, 32 – HUW circulating pump, P – electric relay, 38 – hydraulic coupling, 39 – room temperature sensor CT7.

RECOMMENDED SETTINGS:

	Parameter	Setting	MENU
1,3	Mixer support	ON CO	Service Settings →Mixer Settings
	Max. preset mixer temperature	75°	Service Settings →Mixer Settings
	Heating curve. mixer	0.8 – 1.4	Service Settings →Mixer Settings
	Weather control mix.	ON	Menu → Mixer Settings
2	Mixer support	Floor ON	Service Settings →Mixer Settings
	Max. preset mixer temperature	50°C	Service Settings →Mixer Settings
	Heating curve. mixer	0.2 – 0.6	Service Settings →Mixer Settings
	Weather control mix.	ON	Menu→ Mixer Settings
	Circulation support	ON	Pump Service Settings
	OPERATION mode: Return Protection	OFF	Service Settings → Boiler Settings → Return Protection 4D

[5] The presented hydraulic diagram does not replace central heating engineering design and may be used for information purposes only.

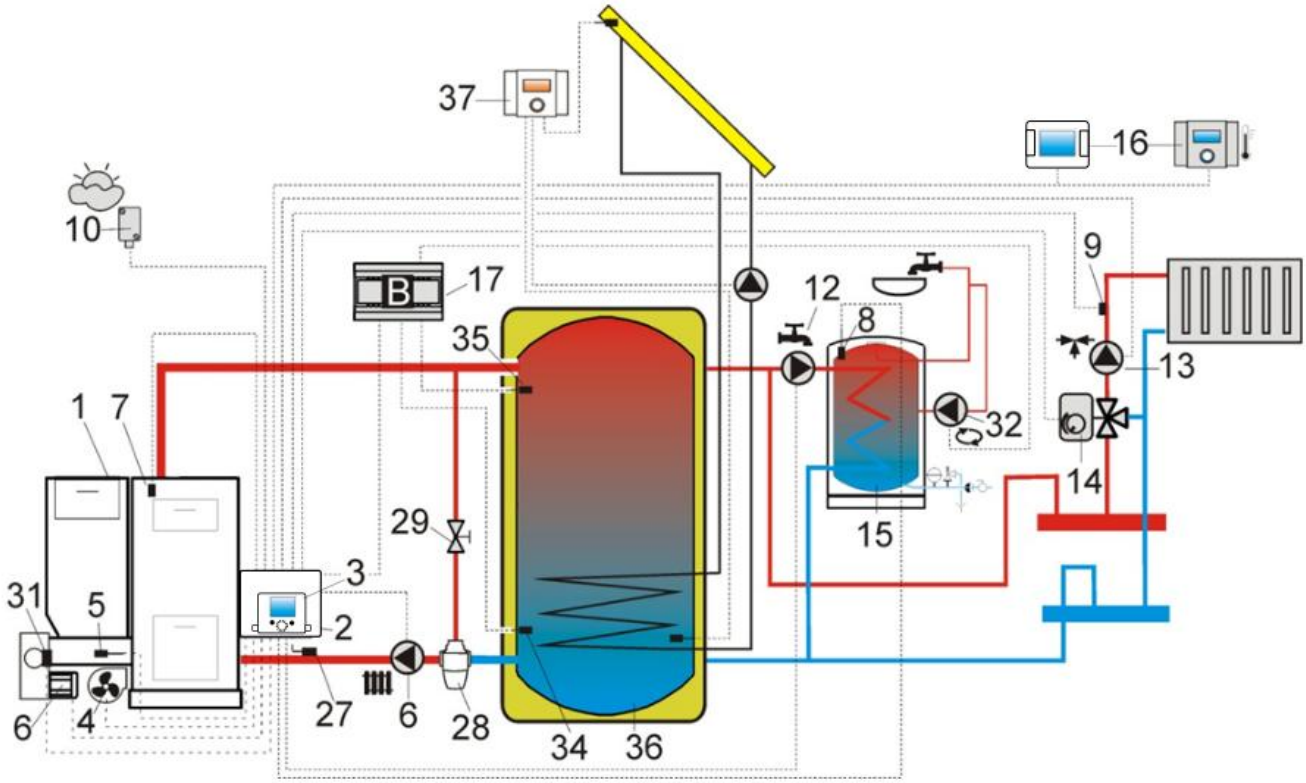

Diagram with heat buffer and additional module B[6], where: 1 – boiler, 2 – ecoMAXX regulator – module A, 3 – ecoMAXX regulator – control panel, 4 – fan, 5 – feeder temperature sensor, 6 - gear-motor, 7 – boiler temperature sensor, 8 – HUW temperature sensor, 9 - mixer 1 temperature sensor, 10 – temperature (weather) sensor, 12 – HUW circuit pump, 13 – mixer 1 circuit pump, 14 – mixer 1 servo, 15 – HUW container, 16 – ecoSTER200 room control panel with room thermostat function, 17 – extension module B, 27 – return temperature sensor, 28 – thermostatic 3-way valve (to protect boiler return), 29 - throttle mushroom valve, 32 – HUW circulating pump, 34 – lower buffer sensor, 35 – upper buffer sensor, 36 – heat buffer, 37 – additional solar ecoSOL regulator.

	Parameter	**Setting**	**MENU**
	OPERATION mode: Return Protection	OFF	Service Settings → Boiler Settings → Return Protection 4D (if mixer sensor in not provided - this option is not available)
	Mixer support 1	ON CO	Service Settings → Mixer Settings 1
	Max. preset temperature of mixer 1	75°	Service Settings → Mixer Settings 1
	Heating curve. mixer 1	0.8 – 1.4	Service Settings → Mixer Settings 1
	Weather control mix.1	ON	menu→ Mixer Settings 1
	Circulation support	ON	Pump Service Settings →
	Buffer Support	ON	Buffer service Settings
	Buffer loading start temp.	40°	Buffer Service Settings
	Buffer loading end temp.	60°	Buffer Service Settings
	Min. buffer temp.	23°	Buffer Service Settings

Once the heat buffer (36) has been loaded, the regulator stops the pump (6) and enters SUPERVISION mode. The pump (6) starts in-spite of loaded buffer (36) once the boiler temperature has exceeded the preset value by 10°C. Pumps (12) and (13) are stopped, and servo (14) is closed once the buffer temperature has dropped to below *Min. buffer temp.*

[6] The presented hydraulic diagram does not replace central heating engineering design and may be used for information purposes only.

9 Technical Data

Power supply	230V~; 50Hz;
Current consumption by the regulator	I = 0,2 A
Max. rated current	6 (6) A
IP rating of the regulator	IP20
Ambient temperature	T50
Ambient temperature	0...50 °C
Storage temperature	0...65°C
Relative humidity	5 - 85% without steam condensation
Temperature measurement range of sensors CT4	0...100 °C
Temperature measurement range of sensors CT6-P	-35...40 °C
Accuracy of temperature measurement using sensors CT4 and CT6-P	2°C
Connectors	Screw terminals at supply voltage side - 2.5mm^2 Screw terminals at control voltage side - 1.5mm^2
Graphical display	Graphical 128x64
Overall dimensions	340x225x60mm
Total weight	1,6 kg
Standards	PN-EN 60730-2-9 PN-EN 60730-1
Software class	A
Pollution degree	2nd pollution degree

10 Storage and transport conditions

The controller cannot be exposed to immediate effects of atmospheric conditions i.e. rain or sunrays. Temperature of storage and transport should be within scope -15…65°C degrees.

During transport the controller cannot be exposed to vibrations bigger than typical for transport of boilers as well as direct pressure upon the clamp cover in order to protect the STB capillary, which is situated inside the clamp box for the controller version equipped with STB device.

11 REGULATOR INSTALLATION

11.1 Environmental conditions

Due to fire risk it is forbidden to use the controller in proximity of explosive gases or dust. Moreover the controller cannot be used in conditions of water steam condensation or be exposed to effects of water.

11.2 Mounting requirements

Regulator should be installed by qualified and authorized technician with observance of applicable standards and regulations. The manufacturer disclaims any liability for damage caused by non-observance of instructions specified in this manual. The regulator is intended to build into other equipment, and may not be used as a stand-alone device.

Ambient temperature and temperature of mounting base should be within the range of 0 - 50°C. The regulator is composed of two modules: a control panel and an operating unit, connected with electric wire.

11.3 Module installation

The regulator casing does not provide dust and water immunity. In order to provide the protection from these factors the regulator should be enclosed with a proper casing. The regulator is to be enclosed – which means the regulator should be screwed on to the flat horizontal or vertical surface (e.g. boiler housing, room wall). To screw on the regulator use mounting holes and proper screws. Location and spacing of mounting holes are shown in the picture below. The regulator must not be used as a free-standing device.

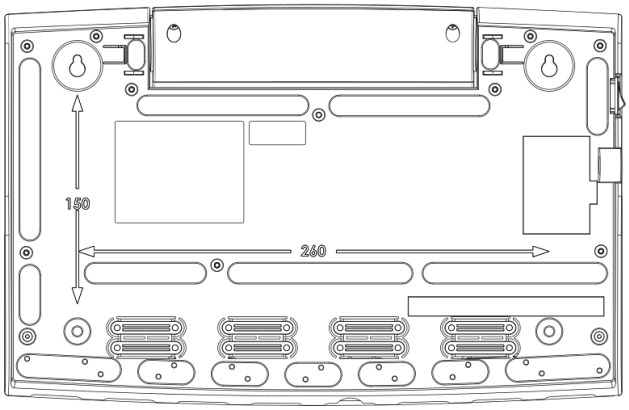

After installation make sure that the device is properly mounted and it is impossible to detach it from the mounting surface.

Opening of the boiler door or flue leakiness cannot expose the

regulator directly to hot gases and fire from the fireplace.

In case of using the version with STB device before making the montage and wiring it is strongly recommended to take out the STB capillary from inside the clamp box using cable opening as described on the picture below.

Attention! This capillary cannot be smashed or bend with acute angle.

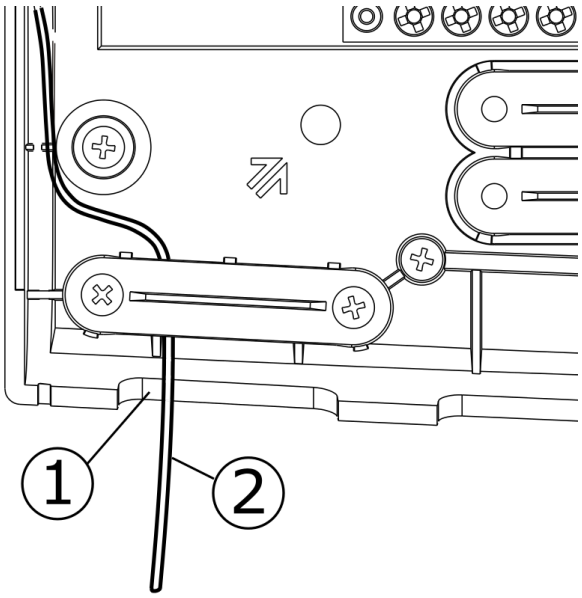

1- Cable opening 2 – The STB capillary cable, which was being correctly taken out from the clamp box.

11.4 IP protection rate

The regulator casing provides the IP20 protection rating**.** The casing on the connectors cover side provides IP00 rating, and because of that connectors must be unconditionally covered with the cover.

If there is a need to gain an access to the terminals side, it is a must to disconnect the mains voltage and make sure there is no dangerous voltage on regulator terminals.

11.5 Electric connection

The regulator is designed to be fed with 230V~, 50Hz voltage. The electrical system should be:

- three core (with protective wire),
- in accordance with applicable regulations.

Caution: After the regulator is turned off using the keyboard, dangerous voltage can occur on the terminals. Before starting any assembly works, you must disconnect the mains supply and make sure that there is no dangerous voltage on the terminals and the leads.

Connection cables should not have contact with surfaces which temperature exceeds cables nominal operating temperature. Terminals 1-22 are designed to connect devices supplied by the mains 230V~ voltage. Terminals 25–48 are designed to work with low-voltage devices (<12V)

Connection of the 230V~ mains voltage to terminals 25-48 or to transmission terminals G2, G3, B and USB results in the regulator damage and poses a threat of electrocution.

Tips of connection cables, especially mains voltage cables should be secured from splitting by e. g. insulated clamp sleeves in accordance with the picture below: a – properly secured, b – improperly secured.

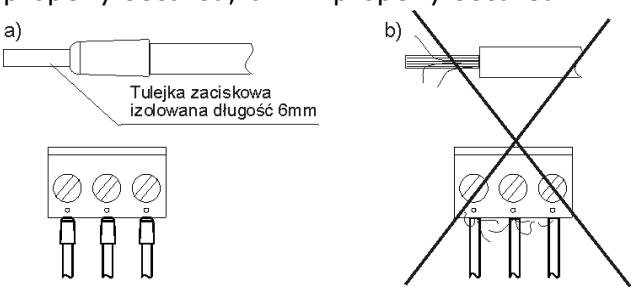

Insulated clamp sleeve, 6mm lenght

Unconditionally check if any lead of the insulated cable, or the cable itself DO NOT have electrical connection with the metal grounding strip (which is placed near to high voltage terminals of the regulator).

The feeder cable should be connected to the terminals marked with an arrow.

All peripherals (such like: pumps, RE-marked relays and connected recipients) may be connected only by qualified person in accordance with applicable regulations. Safety precautions to prevent electrocution shall be observed.
Regulator shall be equipped with a set of pins connected to 230V AC mains.

Protection lead of the power supply cable and protection leads of connected devices should be connected to the grounding strip placed inside the casing of the regulator marked with ⏚.

Before making any connections remove the cover from the casing of the regulator as shown below.

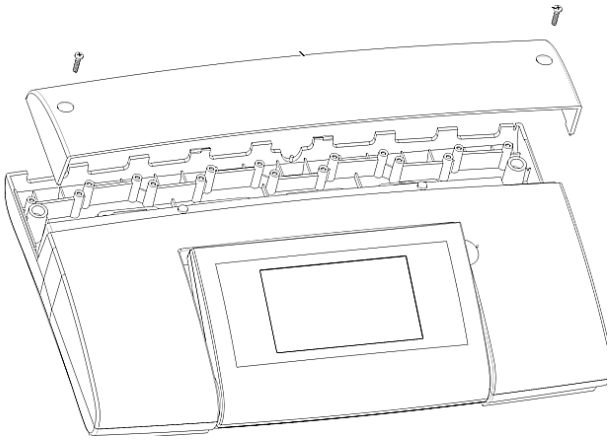

- cables secured from splitting should be connected to screw terminals of the (6) connector.
- Cables should be put through cable outlets in the casing (1) and secured from ripping or loosening by a holdfast (5 – break it out from the casing).
- Cables insulation should be stripped by the minimum possible, max. 60mm. If there is a necessity to strip cable insulation more than 60mm, cable leads should be fasten together or with other leads near the connector – in order to prevent contact with unsafe parts in the case of falling out the lead from the connector.
- It is not allowed to coil excess of the cable and to leave not connected leads inside the casing of the regulator.

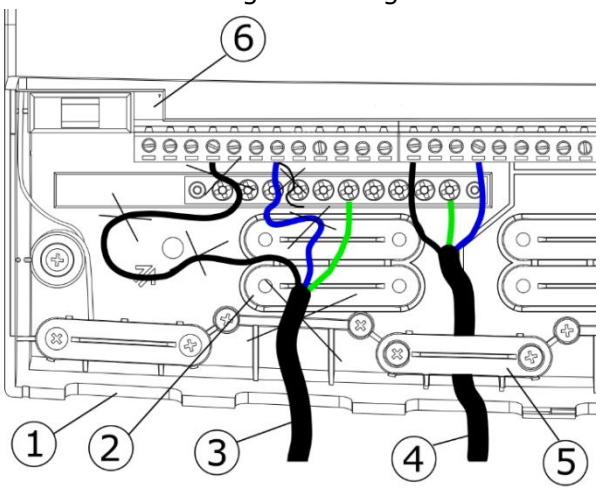

1 – cable outlets, 2 – holdfasts placing (should be broken out for the casing), 3 – improper cable connection (it is not allowed to coil excess of the cable inside the device and to leave cables with stripped insulation), 4 – proper cable connection, 5 – holdfast of the cable, 6 – connector.

Electrical cables should be isolated from hot parts of the boiler, especially from flues.

- When the cables connection is done the cover of the connectors has to be put in place.

The connectors cover should be always screwed on to the casing of the regulator. Apart from providing safety for the user, the connectors cover also protects the interior of the regulator from hazardous environmental conditions providing a proper level of the IP protection.

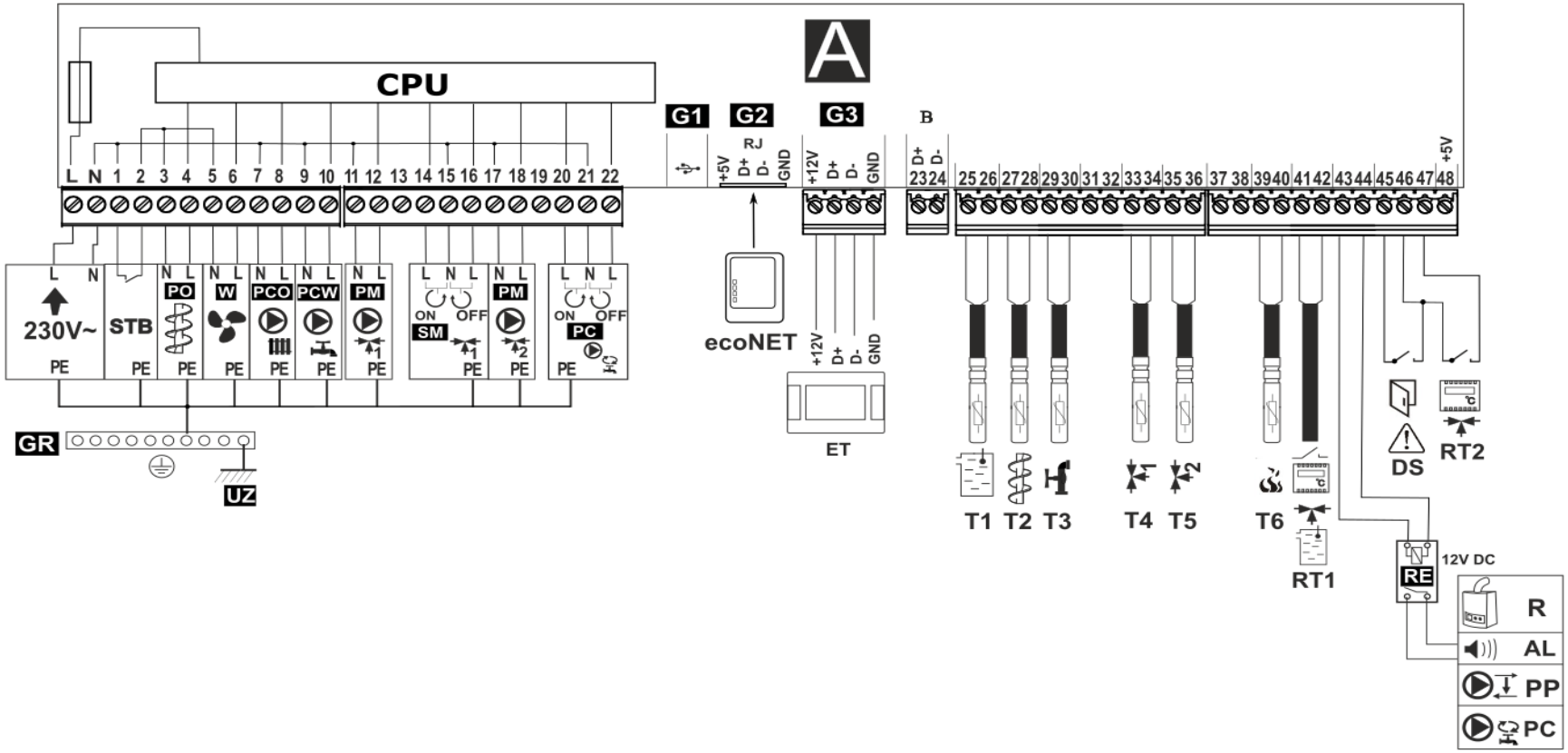

Wiring diagram – four pumps T1 – boiler temperature sensor CT4, T2 – fuel feeder temperature sensor CT4, T3 – HUW temperature sensor, T4 – underfloor heating circuit sensor CT4, T5 – mixer 2 temperature sensor CT4, T6 – exhaust gas temperature sensor CT2S, RE – electric relay (12V, max 80mA), to connect reservoir boiler R/alarm indicator AL./shunt pump PP, RT1- universal thermostat of the mixer 1 and the boiler, RT2 – thermostat of mixer 2, R – reservoir boiler, AL – alarm annunciator, PP – boiler shunt pump to protect boiler return, ET – room panel ecoSTER TOUCH, L,N,PE – power supply cable 230V~, STB – safety temperature limiter (disconnects feeder and blow-in), W – fan, PO-fuel feeder motor, , PC – HUW circulating pump (instead of mixer servo), PCO – boiler pump, PCW – HUW pump, PM – thermostatic mixer circuit pump (without electric servo) to underfloor heating, SM – servo of the mixer, GR – grounding strip, UZ – grounding of metal regulator housing, ecoNET – ecoNET300 internet module, DS – additional protection (description in section 35).

Condition of PM pump operation is the setting: Service Settings →Mixer 1 Settings → Mixer support = pump only (in case mixer sensor T4 is not installed, this option is not available)

Condition of PC pump operation is the setting: Service Settings →Mixer 1 Settings → Mixer support =pump only or = OFF (in case mixer sensor T4 is not installed, this option is not available)

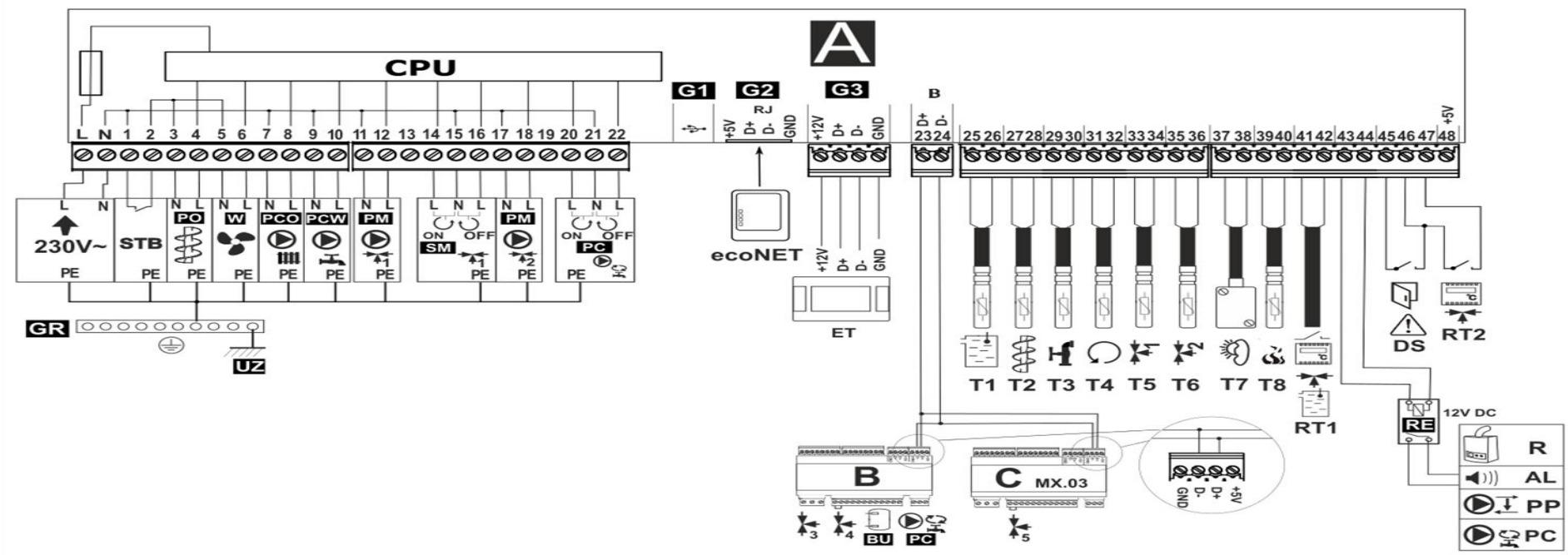

Wiring diagram – with electric servo of valve T1 – boiler temperature sensor CT4, T2 – fuel feeder temperature sensor CT4, T3 – HUW temperature sensor, T4 – mixer 1 temperature sensor CT4, T5 – out-door temperature sensor - type CT6-P, T6 – boiler return water temperature sensor,, T7 – weather temperature sensor CT6-P, T8 – exhaust gas temperature sensor CT2S, RE – relay (12V, max 80mA) to connect reserve boiler R, alarm AL, boiler shunt pump PP, or HUW circulating pump PC, RT1 – universal thermostat of the mixer 1 and the boiler ,RT2 – thermostat of the mixer 2, R – reservoir boiler, AL – alarm indicator, PP – shunt pump to protect the return of the boiler, PC – HUW circulation pump, ET – room panel ecoSTER TOUCH, B – additional module (two heating circuits, heat buffer, HUW circulation pump), L,N,PE – power supply cable 230V~, STB – safety temperature limiter (disconnects feeder and blow-in), W – fan, PO - fuel feeder motor, PCO – boiler pump, PCW – HUW pump, PM – no.1 mixer pump, SM – mixer servo, GR – ground strip, UZ – grounding of metal regulator housing.
ecoNET – ecoNET300 internet module, DS – additional protection, (description in section 35).

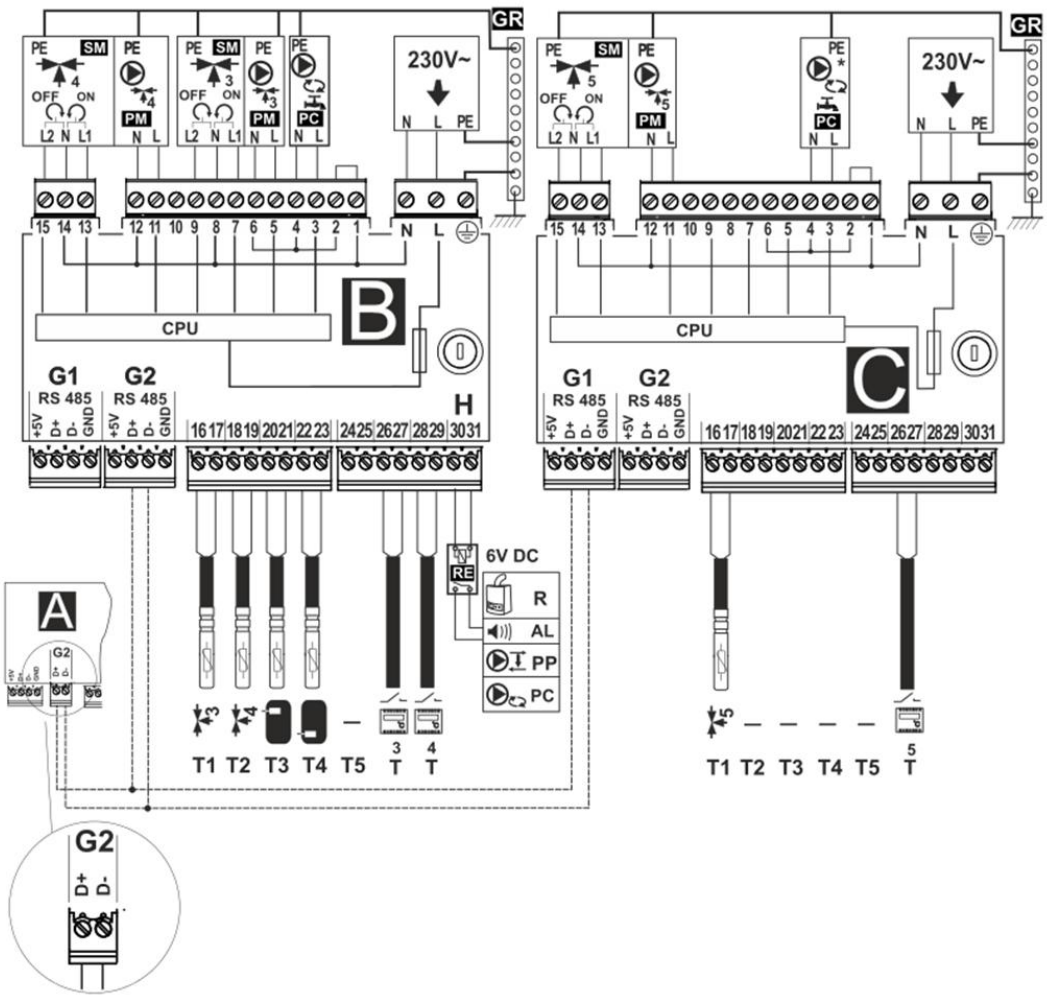

Wiring diagram - modules B and C: T1 – mixer 2 or 4 temperature sensor CT4, T2 – mixer 3 or 5 temperature sensor CT4, T3 – upper temperature sensor of the buffer, T4 – lower temperature sensor of the buffer CT4, T5 – reserve, RE – relay (12V, max 80mA) to connect reserve boiler R, alarm AL, boiler shunt pump PP, or HUW circulating pump PC , T – room thermostat, R – reserve boiler, AL – alarm annunciator, PP – boiler shunt pump to protect boiler return , PC – HUW circulating time, B – extension module (two heating circuits, heat buffer, HUW circulating time), C (MX.03) – extension module (two additional heating circuits), power supply cable, 230V AC , PM – mixer pump, SM – mixer servo, PC – HUW circulating time, * - HUW circulating pump available in module C from software version mod_A_v.01.31.21, GR – ground strip.

11.6 Temperature sensors connection

Wires of sensors can be extended by wires with diameter no smaller than 0,5mm^2. Total length of wires in each sensor should not exceed 15m.

The boiler temperature sensor should be installed in a thermostatic pipe installed in the boiler. Temperature sensor of hot water silo should be installed in a thermostatic pipe welded into the silo. The mixer temperature sensor should be installed in a sleeve located in stream of running water in pipe, but also it can be installed on the pipe, on condition that it is thermally isolated from the pipe

Sensor must be protected from getting loose from the surfaces to which they are connected.

Good thermal contact should be maintained between sensors and the measured surface. To this purpose thermal grease should be used. It is not acceptable to lubricate sensors with water or oil. Wires of sensors should be separated from network electrical wires. In such a case wrong readings of temperature may be shown. Minimum length between those wires should be 10 cm. It is not acceptable to allow for contact between wires of sensors and hot parts of the boiler and the heating installation. Wires of sensors are resistant to temperature not exceeding 100°C degrees.

11.7 Weather sensors connection

The controller cooperates solely with the weather sensor type CT6-P. The sensor should be installed on the coolest wall of the building. Usually it is the northern wall, under the roof. The sensor should not be exposed to direct sunrays and rain. The sensor should be installed at least 2 m above the ground, far away from windows, chimneys and other sources of heat.
To make the connection use wire with diameter at least 0,5mm2 up to 25m long. Polarization of wires is not essential. Second end should be connected to terminals of the controller or properly to the used kind of controller.
The sensor should be screw to the wall. Access to assembly holes is possible after unscrewing the cover of the sensor.

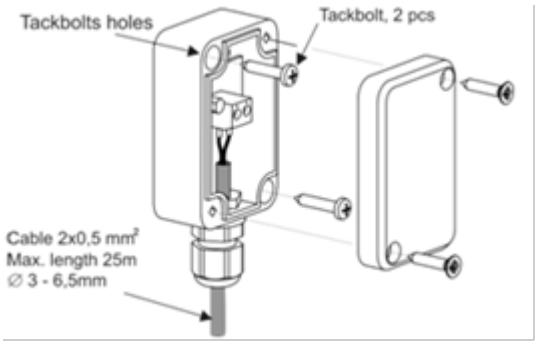

11.8 Testing of temperature sensors

CT4 temperature sensor may be tested by measuring its resistance at the given temperature. In case of significant differences between measured resistance and the values indicated in the table below - replace the sensor.

CT4 (KTY81)			
Temp. °C	Min. Ω	Nom. Ω	Max. Ω
0	802	**815**	828
10	874	**886**	898
20	950	**961**	972
25	990	**1000**	1010
30	1029	**1040**	1051
40	1108	**1122**	1136
50	1192	**1209**	1225
60	1278	**1299**	1319
70	1369	**1392**	1416
80	1462	**1490**	1518
90	1559	**1591**	1623
100	1659	**1696**	1733

CT6-P (Pt1000) - weather			
Temp. °C	Min. Ω	Nom. Ω	Max. Ω
-25	901,6	**901,9**	1000,2
-20	921,3	**921,6**	921,9
-10	960,6	**960,9**	961,2
0	999,7	**1000,0**	1000,3
25	1096,9	**1097,3**	1097,7
50	1193,4	**1194,0**	1194,6
100	1384,2	**1385,0**	1385,8
125	1478,5	**1479,4**	1480,3
150	1572,0	**1573,1**	1574,2

CT2S (Pt1000) – exhaust gas			
Temp. °C	Min. Ω	Nom. Ω	Max. Ω
0	999,7	**1000,0**	1000,3
25	1096,9	**1097,3**	1097,7
50	1193,4	**1194,0**	1194,6
100	1384,2	**1385,0**	1385,8
125	1478,5	**1479,4**	1480,3
150	1572,0	**1573,1**	1574,2

11.9 Connection of boiler's room thermostat

☞ Note: the boiler room thermostat should be switched off if the whole central heating system of the building is supplied through a mixing valve equipped with electric servo.

The regulator may work with mechanical or electronic room thermostat, which opens the contacts once the preset temperature has been achieved.
Set-up the operation of room thermostat in:

MENU → Boiler Settings → Room thermostat → Thermostat Selection → Universal

☞ Once the preset room temperature has been reached, thermostat opens its contacts and the display shows: ▣

Once the temperature in the room, in which the room thermostat is installed, has reached the preset value, regulator reduces the preset boiler temperature by the value set in *Inc. p. b. temp. thermostat* and the display shows ↓▣. This will cause longer breaks in boiler operation (the boiler will remain in SUPERVISION mode) and the same, temperature in heated rooms will drop.
Moreover, the boiler pump (CH pump) may be interlocked for a certain time by opening the contacts of the room thermostat in heated rooms. To activate this function - enter:
MENU → Boiler Settings → Room thermostat → *CH pump standstill*
and set the value of this parameter >0. Setting the value of e.g. ,,5" causes the pump will be stopped by the room thermostat for 5 min. When ,,0" is set, the CH pump will not be stopped by the room thermostat. Once this time has elapsed, the regulator switches on CH pump for a time set in *CH pump op t. th. on* e.g. 30s. This feature prevents from excessive cooling of the system caused by a pump stop.

⚠ The pump interlock by opening the contacts of the room thermostat may be activated only upon making sure the boiler will not be overheated.

11.10 Connection of mixer's room thermostat

Room thermostat connected to the operational unit affects mixer 1 circuit and/or boiler circuit. If the whole heating circuit of the building is supplied by a mixer with electric servo, room thermostat for boiler should be turned off.
Room thermostat, after disconnection of its connectors reduces preset temperature of the mixer circuit by a value set up in: *Reduce preset mixer temperature to thermostat*. This parameter is available in:

MENU → Mixer Settings no. 1,2,3,4,5
The mixer pump does not stop upon opening contacts of the room thermostat unless other settings have been made in the Service Menu. Select the value of this parameter so that once the room thermostat has responded (its contacts have opened), the temperature in the room drops. Other settings - see sec. 7.14

11.11 Connection of reserve boiler

The regulator can control a reserve boiler (gas- or oil-fired), eliminating the necessity of enabling or disabling this boiler manually. The reserve boiler will be enabled if the temperature of the pellet boiler drops, and disabled when the pellet boiler reaches an appropriate temperature. Connection to a reserve boiler, e.g. oil-fired one, should only be made by a qualified fitter, in accordance with the technical documentation of this boiler.

The reserve boiler should be connected via relay to terminals 43-44.

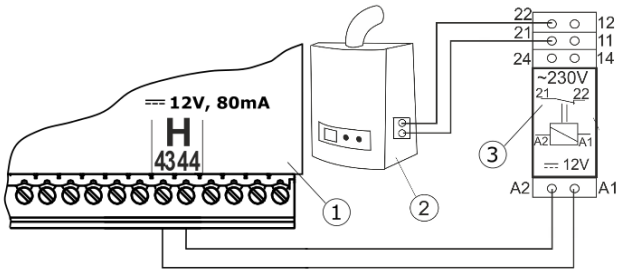

Model diagram of layout for connecting a reserve boiler to the ecoMAXX regulator, where: 1- regulator ecoMAXX, 2 – reserve boiler (gas- or oil-fired), 3 – Module U3, consisting of relay RM 84-2012-35-1012 and base GZT80 RELPOL

In a standard version, the regulator is not equipped with the U3 module.

You have to perform assembly and installation of the module by yourself, in conformity with the applicable standards.

Set the temperatures of reserve boiler switch on/off:

MENU → service settings → boiler settings → Reserve Boiler → *Reserve boiler deactivation temperature* . Control of reserve boiler is off upon setting this parameter at ,,0”. Now, set-up Output H on reserve boiler:

MENU → Service Settings → output H = reserve boiler

Once the retort boiler has been fired up, and its temperature has exceeded the preset value (e.g. 25°C), ecoMAXX regulator switches off the reserve boiler and applies voltage 12V DC at Output H, which causes release of coil of U3 module relay and opening its contacts. Once the boiler temperature has dropped below the value set in the parameter of *Reserve boiler deactivation temperature,* the regulator stops to supply voltage to the Output H, and the reserve boiler switches on.

Entry of the ecoMAXX regulator to STAND-BY conditions causes the reserve boiler switches on.

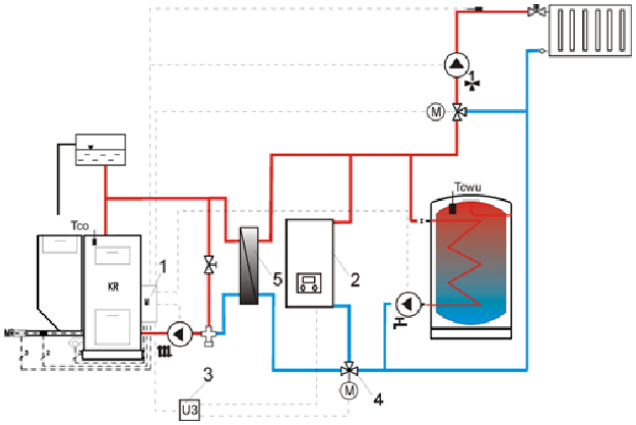

Hydraulic diagram with the reserve boiler; connection of open and close circuits 1 – ecoMAXX regulator , 2 – reserve boiler, 3 – U3 module (2 pcs), 4 – switching valve (with limit switches), 5 – heat exchanger (recommended settings: *HUW mode = no priority, heat exchanger = ON* (Menu → Pump Service Settings).

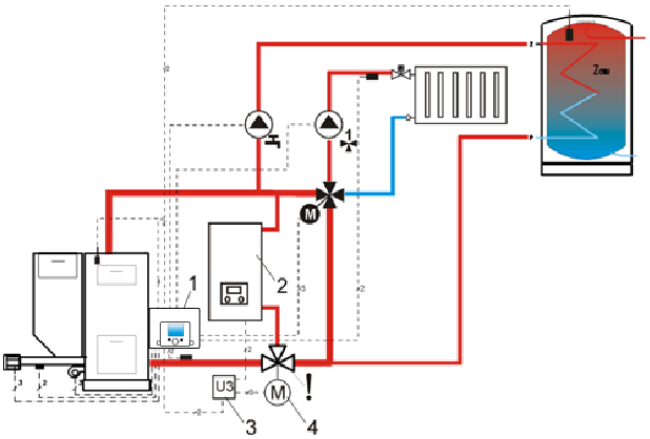

Hydraulic diagram with the reserve boiler and the 4-way valve in close circuit 1 – ecoMAXX regulator, 2 – reserve boiler, 3 – U3 module, 2 pcs., 4 – switching valve servo (with limit switches) - to ensure free gravitational flow of water in the boiler circuit, active cross-section of switching valve (4) has to be larger than or equal to cross-section of boiler circuit pipes. Use pipes of large cross section for gravitational boiler circuit.

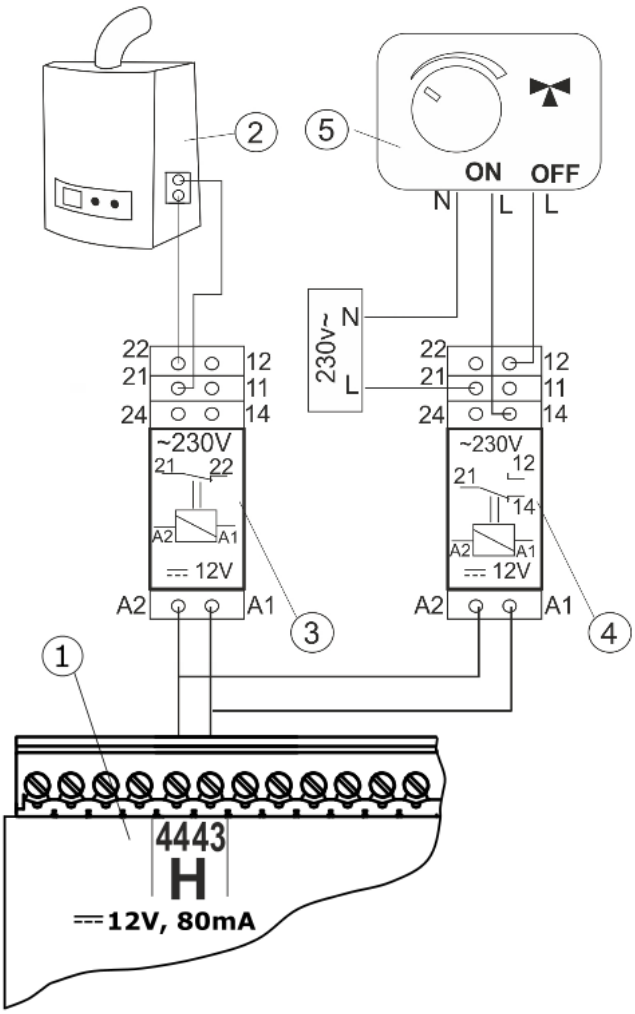

Electric diagram for switching valve of the reserve boiler, where: 1 – regulator ecoMAXX, 2 – reserve boiler, 3,4 – relay RM 84-2012-35-1012 RELPOL and base GZT80 RELPOL, 5 – servo of switching valve

11.12 Connection of alarm signaling

The regulator may announce an alarm condition by activating external device (e.g. bell or GSM device to send SMS). Alarm signaling and reserve boiler control use the same terminals, therefore, setting of the H output for alarm signaling deactivates the function of reserve boiler control. Connect alarm annunciator through U3 module.

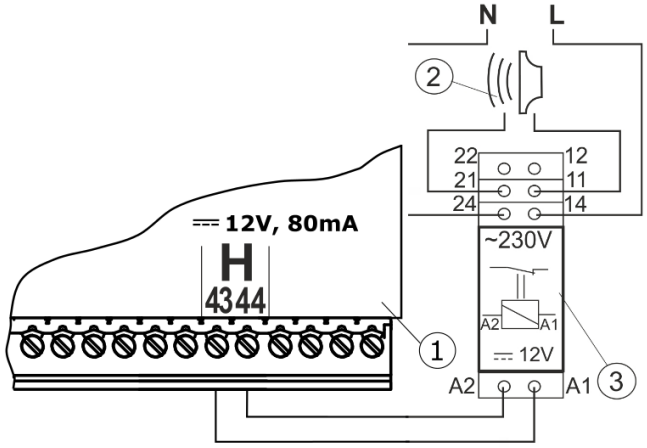

Connection of an external alarm annunciator 1 - ecoMAXX regulator - module A, 2 – external alarm annunciator, 3 – relay RM 84-2012-35-1012 RELPOL and base GZT80 RELPOL,

For proper operation, set proper value of the parameter: *Active alarm signal code* in:

MENU → Service Settings → Boiler Settings → Alarms → Active alarm signal code

When "31" has been set - in case of any alarm occurred, voltage is applied at contact 43-44. Setting this parameter at "0" causes the regulator does not apply voltage upon occurrence of any alarm. Contact 43-44 may be so set up that the voltage will be applied at it upon occurrence of one or few alarms. The values of this parameter to be set for respective alarms are given in the table below:

Boiler overheating	Flash back	CH boiler temperature sensor damage	Feeder temperature sensor damage	No fuel	Boiler overheated, STB connectors disconnected	relay failure in the feeder path
AL 1	AL 2	AL 3	AL 4	AL 5	AL6	AL7
1	**2**	**4**	**8**	**16**	**32**	**64**

Example: when this parameter is set at ”8”, voltage will be applied at the contact only upon occurrence of an AL4 alarm. In case of ”1” setting only alarm AL1 will be announced. In case the contact should signal few alarms (e.g. AL2 and AL4 alarms) - sum-up the

values indicated in the table above for individual alarms (i.e. 2 + 8 = 10) and set so calculated sum. For signaling alarms: AL1, AL2 and AL3 - set ,"7" because the sum of 1 + 2 + 4 = 7.

11.13 Connection of mixer servo

When connecting electric servo of the mixer take care to prevent boiler overheating, which may occur when the flow of boiler water is limited. You are advised to get familiar with the position of the valve corresponding to its maximum opening before commencement of the work so that you may ensure heat collection from the boiler at any time it is required.

The regulator works only with mixing valve servos equipped with limit switches. Use of other servos is not allowed. The servos of full turn time from 80 to 255 s may be used.

Description of mixer servo connection:

- connect mixer temperature sensor,
- switch on the regulator and select proper *mixer support* in service menu:

MENU → Service Settings → PASSWORD→ Mixer Settings - e.g. "CH ON ".

- enter proper *Valve Opening Time (Valve Opening Time*) in Service Settings (this time should be indicated on servo rating plate e.g. 120s),
- disconnect power supply of the regulator,
- determine direction of servo closing/ opening. For this purpose, set the selector located on the housing of electric servo at manual control and find the positions of the valve in which the temperature in mixer circuit is maximum and minimum (it corresponds to the setting of the regulator of "100% ON" and "0% OFF", respectively). Write down these positions.
- connect mixer pump,
- wire mixer servo with the regulator,
- connect power supply to the regulator,
- check whether wires to mixer closing and opening are not interchanged. To do this, enter MENU →*Manual Control* and open the mixer by selection of *Mix1 open = ON*. When opening, temperature on mixer sensor should increase. In other case, disconnect power supply to the regulator and interchange the wires (Note: other reason of this fault may be incorrect mechanical connection of the valve! – refer to the documentation of valve manufacturer and check whether the valve is properly connected),
- calibrate % factor of mixer valve opening. To do this, disconnect power supply of the regulator and set the selector on housing of electric servo at manual control. Turn the valve head to fully closed position, and set the selector on the housing of electric servo at AUTO again. Connect power supply to the regulator. Now, % factor of mixer valve opening has been calibrated. Note: Calibration in mixers no. 2,3,4,5 starts automatically upon connection of power supply. In case of these mixers - wait until a % factor of the mixer valve opening has been calibrated. During the calibration, servo is closed for the time set in *Valve Opening Time*. Running calibration is indicated by "KAL" in MENU Information , tab "Mixer-Info",
- set other parameters of the mixer.

11.14 Connection of mixer pump

The HUW circulating pump may be connected with the regulator in a few ways:

- to the output "H" through a relay. The condition to work is setting the service parameter *Output H = circulating pump* .
- to terminals 21-22 instead of electric servo of the mixer (the condition to work is disconnecting the mixer sensor and setting the service parameter *Mixer support = OFF* or *Pump only*),
- to additional module B,

11.15 Connection of boiler shunt pump

The boiler shunt pump should be connected to output H through a relay. The condition to work is setting the service parameter *Output H = boiler shunt pump.*

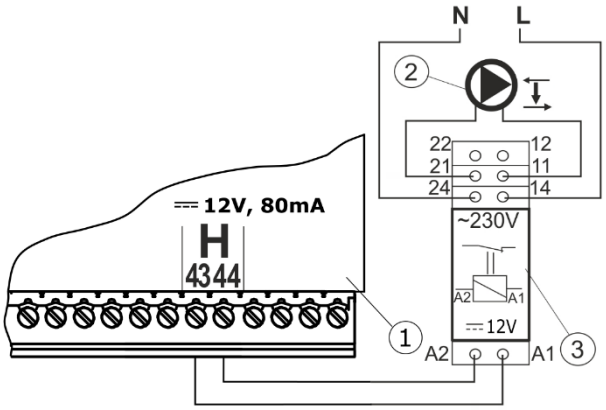

Connection of the boiler shunt pump 1- ecoMAXX regulator - module A, 2 – boiler shunt pump, 3 – relay RM 84-2012-35-1012 RELPOL and base GZT80 RELPOL

The boiler shunt pump may operate basing upon the read-out of:

- the return temperature sensor - the pump starts once temperature at the boiler return sensor has dropped below the value set in the parameter *CH pump activation temperature* available in the main menu. It is recommended to set this value at min. 50°C,
- the return temperature sensor and the boiler temperature sensor - the pump starts once the temperature difference has exceeded the value of H1 parameter and stops once it has dropped below H2 value. Those parameters are available in:

Menu → Service Settings → Pumps. The condition: H1>H2 has to be fulfilled.

For a proper operation of the hydraulic system with the boiler shunt pump, a control valve to limit the flow has to be installed and adjusted.

It is recommended to connect the regulator (1) and the pump (2) to one common source of power supply. This solution will enable disconnecting power supply to both equipment at the same time.

11.16 STB temperature limiter

Version with temperature limiter

When temperature of water in the boiler exceeds 95°C, power supply of the electric feeder and the fan is cut off by the safety temperature limiter. To reset the limiter it is needed to press the button placed in the side of the casing, near the power switch. Pressing of that button is only possible when temperature of water in the boiler drops.

Version without temperature limiter

If the regulator ecoMAX910R1 is not factory-equipped with the safety temperature limiter, the STB should be connected as an external device. The STB temperature limiter should be connected to the 1-2 terminals shown on the electric scheme. If the safety temperature of water in the boiler exceeds, the power supply of the fan and the engine of feeder will be cut off by the temperature limiter.

Safety temperature limiter should have nominal operation voltage of ~230V and should follow current regulations.

Warning: 1-2 terminals are under dangerous voltage.

11.17 Connection of room control panel

The ecoSTER200 room control panel may be installed. Main functions of the panel are following:

- room thermostat (3 thermostat units),
- boiler control,
- alarm annunciator,
- fuel level indication.

4-wire connection:

- The panel ecoSTER TOUCH should be connected to the G3 connector of the regulator, according to the electric scheme.
- The version 2 of the panel ecoSTER200 should be connected as shown in the picture below, together with room sensors CT7 of a thermostat 2,3.

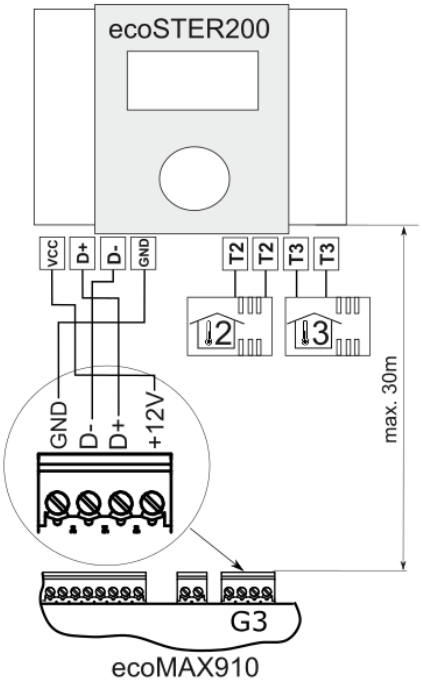

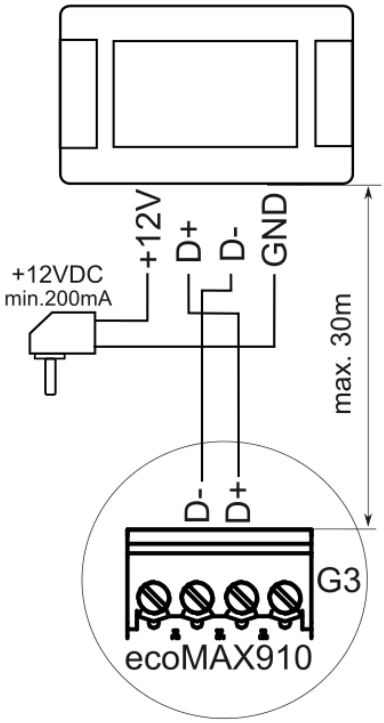

2-wire connection:

For two-wire connection, power supply of 12V DC and rated current of min. 200mA is required. Disconnect GND and +12V wires from the module (2) and re-connect them to external power supply unit arranged near ecoSTER200 (1). The power supply unit is not included in the regulator supply. The max. length of wires to the ecoSTER200 control panel depends on cross-section area of a wire, and e.g. for a wire of cross-section of 0.25 mm^2 it should not exceed 30m. The cross-section area of the wire should not be less than 0.25 mm^2.

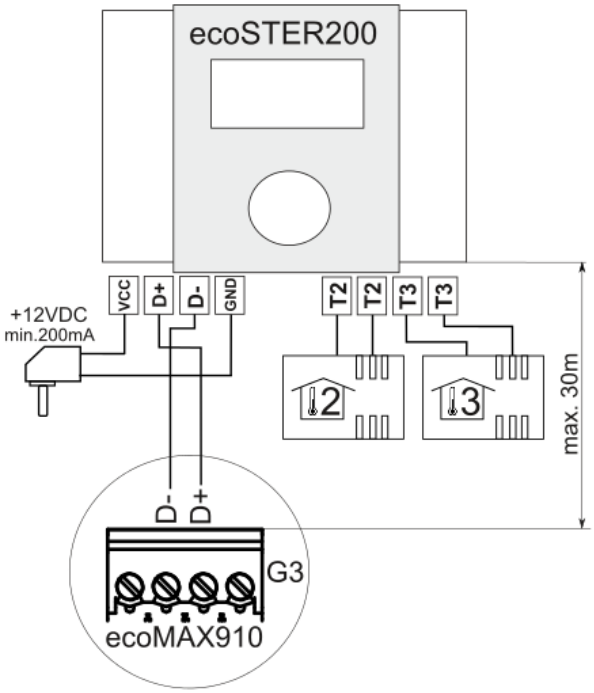

11.18 DS input

There is a possibility of connecting the sensor that detects a door or fuel tank flap opening. Opening of the DS contact results in disconnection of the fan and the feeder power supply – section 11.5. DS connector is under safe voltage.

11.19 Software update

Simultaneous update of the regulator and panel software can be done using memory card.

Software update can be performed only by a qualified person. Precautions to prevent electrocution should be observed!

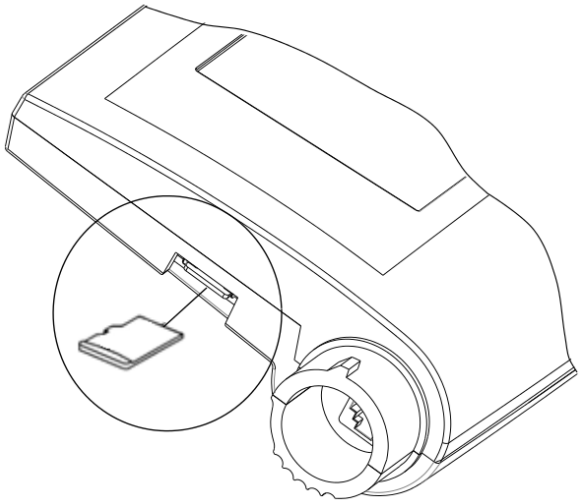

To update the software:

- disconnect power supply of the regulator.
- insert **microSDHC** memory card (other types of memory cards are not supported) to a socket in the movable casing of the panel shown above. On the memory card there should be written new software in the ***.pfc** format as a 2 files: a file with the panel software and a file with the module A software.
- Software files should be placed directly on the memory card, do not place them in any subdirectory,
- then connect power supply of the regulator and go to:

Service settings → **Software update** and perform the update firstly in the A module, then in the panel, and in the end in other devices.

12 BOILER SERVICE SETTINGS

Burner Settings	
Blow in output SUPERV.	Power of the fan in SUPERVISION mode - too high value may cause boiler overheating or flash back to the feeder; too low value - may result in fuel pouring.
Feeding Time SUPERVISION	Time of fuel feeding in SUPERVISION mode; Too high value may cause boiler overheating or fuel pouring; too low - fuel return to the feeder.
Airflow oper.extend. SUPERV	In SUPERVISION mode of boiler operation, once the fuel dose has been supplied and the feeder stopped, the fan remains in operation for a time set in "*Airflow oper.extend.* to fire-up the fuel dose supplied. Value of this parameter may not be too high because it may lead to boiler overheating
Fan in SUPERV.	Enable to start and stop the fan in SUPERVISION mode
Min. blow-in output	Min. blow-in output which may be set in the parameters related with the fan power available in the User's menu.
Cycle order OPERATION	Setting this parameter at "Feeding-break" causes the OPERATION mode will start from a feeding of fuel dose. Setting this parameter at ,"Break - Feeding" causes the OPERATION mode will start from break in fuel feeding. This parameter is helpful in case of frequent boiler change-over from SUPERVISION to OPERATION mode, where fuel pouring or furnace lowering may occur.
Fuzzy Logic	Fuzzy Logic settings are available only for boiler manufacturers
Min. preset boiler temperature	This parameter prevents the user to set too low value of boiler preset temperature. Boiler operation at too low temperature may cause its quick damage, corrosion, dirt, etc.
Max. preset boiler temperature	This parameter prevents the user to set too high value of boiler preset temperature.
Reduction value	This parameter determines the temperature at which the boiler will return from SUPERVISION to OPERATION mode
No fuel detection time	It is the time after which the regulator starts the procedure of detecting lack of fuel.
No fuel Del T	Difference between preset boiler temperature and actual boiler temperature, at which the boiler starts the procedure of detecting lack of fuel.
Maximum feeder temperature	It is the temperature at which the protection against flashback to fuel feeder activates.
Boiler cooling temp.	Temperature at which boiler cooling down described in sec. 17.2 occurs.
Return Protection4D	A list of settings for boiler return protection function performed using 4-way valve with electric servo. This function is not active if return sensor is disconnected or Mix1 support is OFF. Activation of this function causes all mixers close.
OPERATION mode	This parameter switches ON and OFF the boiler return protection function performed using mixing valve with electric servo. Note: do not switch on this function if the valve is not provided with electric servo!
Min. return temp	Boiler return temperature below the value at which electric servo closes mixing valve.
Return temp. hyst	Electric servo returns to normal operation at the return temperature ≥ *min.return temperature + Return temp. hyst.*
Valve closing	It is % opening of mixing valve during active return protection function. Note: the valve closes with accuracy of +/-1%.
Reserve boiler	The temperature of retort boiler at which reserve boiler (e.g. gas fired boiler) will be OFF is set using this parameter. Details - see sec. 11.11
Alarms	Details - see sec. 11.12

Feeder Efficiency	Parameter used to rough calculation of boiler output (displayed in INFO window) and of fuel level and it has no effect on control of combustion process [kg/h].
Energy Density	Parameter used to rough calculation of boiler output; it has no effect on control of combustion process. Its value for hard coal amounts to approx. 6.5 [kWh/kg]
Tank Capacity	Parameter used to calculate fuel level [kg]. Note: Change and confirmation of the value using the knob replaces previously completed fuel level calibration with calculation of fuel level using *Tank Capacity and Feeder Efficiency* parameters.

13 SERVIS SETTINGS OF PUMPS

CH pump standstill at HUW supply	Parameter available upon connection of HUW sensor. Too long time of HUW container filling at active HUW priority may lead to excessive cooling down of CH system because boiler pump (CH pump) is switched off at this time. Parameter of *CH pump standstill time during HUW filling* prevents it by periodic CH pump switch-on during HUW container filling. After that time, CH pump will switch on for a fixed time set at 30s.
Min. HUW temperature	This parameter is available upon connection of HUW sensor and prevents the user to set too low preset HUW temperature.
Max. HUW temperature	This parameter is available upon connection of HUW sensor. It defines max. temperature to which HUW container will be heated-up during discharge of excess heat from the boiler in emergency conditions. This parameter is important, because setting too high value may cause the risk of burning the user with hot utility water. On the other hand, too low value of this parameter will cause that in case of boiler overheating excessive heat cannot be removed to HUW container. When designing HUW system, possibility of regulator failure should be considered. In case of regulator failure, water in HUW container may be heated-up to hazardous temperature, which may create the risk of burning the user. Therefore, some other protection (e.g. thermostatic valves) should be used.
Incr. boil. temp. for HUW and mixer	This parameter determines by how many degrees the preset boiler temperature will be increased to fill HUW container, buffer and mixer circuit. Temperature is increased only if required. Once the preset boiler temperature has reached sufficient value to fill HUW container, buffer and mixer circuit, the regulator stops its further increase.
HUW operation ext.	This parameter is available upon connection of HUW sensor. Once HUW container has been filled and HUW pump has been stopped, a boiler overheating risk may occur. It occurs in case the preset HUW temperature is higher than the preset boiler temperature. This issue refers particularly to the operation of HUW pump in SUMMER mode, when CH pump is OFF. To cool down the boiler, duration of HUW pump operation may be extended by the time set in *HUW pump operation extension time.*
Circulation support	This parameter switches on/off operation of circulating pump. Upon activation in the user menu, the position of HUW circulating pump is displayed. Note: this function is available only in case Output H is set at circulating pump or mixer 1 support = *OFF* or *pump only*.
Boiler shunt pump H1	Difference between temperature of the boiler and boiler return at which boiler shunt pump switches on has to meet the condition: H1>H2. To have this parameter available, Output H has to be set at ”Boiler Shunt Pump”.
Boiler shunt pump H2	Difference between temperature of the boiler and boiler return at which boiler shunt pump switches off has to meet the condition: H1>H2. To have this parameter available, Output H has to be set at ”Boiler Shunt Pump”.
Heat exchanger	It refers only to hydraulic systems with heat exchangers connected between open and close circuit. Available options: • YES (boiler pump is in continuous operation in a limited circuit: boiler - heat exchanger; it is not exclusive e.g. from

	SUMMER function or HUW priority), • NO (boiler pump in operation as usual).

14 SERVICE SETTINGS OF MIXER

Mixer support	
Off	Mixer servo and mixer pump are OFF
CH ON	It is used when the mixer circuit supplies CH radiator system. Max. temperature of mixer circuit is not limited, mixer is fully opened during alarms e.g. boiler overheating. Note: do not activate this option if the pipes used are not high-temperature resistant. In such conditions it is recommended to set "MIXER SUPPORT" at "FLOOR".
Floor On	It is used when the mixer circuit supplies underfloor heating system. Max. temperature of mixer circuit is limited to the value of the parameter of "*Max. preset mixer temp.*" Note: upon selection of the option of "*FLOOR ON*" set the max. preset mixer temperature at such value, which prevents the floor destruction and occurrence of burn risk.
Pump only	Once the mixer temperature has exceeded *a "mixer preset value"*, power supply to mixer pump stops. Once the mixer temperature has dropped by 2 ºC, the pump switches on again. This option is mainly used to control the underfloor heating pump in case it works with thermostatic valve without servo.
Min. mixer temperature	This parameter is used to prevent the user to set too low preset value of mixer circuit temperature.
Max. mixer temperature	This parameter has two functions: - it enables preventing the user to set too high value of preset mixer temperature, - when the parameter *"Mixer support"* is set at "*FLOOR ON",* it determines the limit value of mixer temperature at which the mixer pump will stop. For underfloor heating set this parameter at the value not exceeding 45°C - 50°C unless the manufacturer of materials used to complete the floor or CH system designer has recommended other values.
Valve opening time	Enter the time of full valve opening taken from the rating plate of valve servo (e.g. 140s)
Pump OFF by thermostat	Once this parameter has been set at "YES", mixer servo closes and mixer pump stops upon opening thermostat contacts (the room has been heated). Performance of this operation is not recommended because the heated room may be cooled down too much.
Operat. in SUMMER	Upon setting of *Operat. in SUMMER = ON* , mixer is not closed in SUMMER mode.
Mixer input dead zone	Parameter setting, which determines the value of temperature dead zone of mixer control system. The regulator controls the mixer in the manner assuring that actual temperature value measured by the mixer sensor is equal to the preset value. Nevertheless, in order to avoid too frequent servo motions, which may unnecessarily reduce its lifetime, regulation starts once the measured temperature of the mixer circuit has been higher or lower than the preset value by the value set in *Mixer input dead zone.*
Emergency valve opening	It is a % valve opening during active boiler overheating alarm. This parameter is used for cast-iron boilers, and is available in some regulators only.
Proportional range	This parameter influences the range of mixer servo motion. Increase of its value causes actual mixer temperature reaches faster the preset value, but too high value set causes temperature overshoot and unnecessary servo motions. Correct value should be determined experimentally. Recommended settings of this parameter should be within the range of 2 – 6 [3].
Integr. time const.	The higher the value of this parameter is the slower the response of servo on temperature off-set is. Setting too low value may cause unnecessarily servo motions, while too high setting will increase time of finding preset temperature value. Correct value should be determined experimentally. Recommended settings of this parameter should be within the range of 100 – 180 [160].

15 BUFFER

Buffer Support	Switches ON/OFF buffer support.
Buffer loading start temp.	Temperature measured by upper buffer sensor at which buffer loading starts.
Buffer loading end temp	Temperature measured by lower buffer sensor at which buffer loading ends.
Min. buffer temp.	Temperature measured by upper buffer sensor at which the pumps are switched off and the mixer servos are closed.
Note: these parameters are available upon connection of additional module B.	

16 Output H

Output H	This parameter determines the function being executed at Output H. Following options are available: - Reserve boiler; - Alarms; - Circulating pump ; - Boiler Shunt Pump ;

17 ALARM DESCRIPTION

17.1 No fuel

In case the boiler temperature dropped in OPERATION mode by the value of *DelT lack of fuel* below the *boiler preset temperature,* the regulator starts counting *No fuel detection time.*

MENU → Service Settings → Boiler Settings → No fuel detection time

If, upon elapsing this time, the boiler temperature has not increased by 1 °C, the regulator switches off heat recipients and starts counting *No fuel detection time* again. If temperature has not increased after this time by 1 °C, the regulator enters STOP mode and generates alarm "No fuel". To reset the alarm - switch OFF and ON the regulator.

☞ *In case the regulator erroneously detected lack of fuel - increase the value of parameter of No fuel detection time - see sec. 122 or decrease the value of DelT lack of fuel.*

17.2 Max.boiler temp. excess

Protection against boiler overheating comprises two stages. In first instance i.e. once the *Boiler cooling temp.* has been exceeded, the regulator attempts to reduce the boiler temperature by activation of the boiler pump, HUW pump and opening the mixer servo (only in case mixer circuit = CH ON). Has the temperature dropped - the regulator returns to normal operation. Is the temperature still increasing (and has reached 95°C), power supply to the fuel feeder and the fan is off and permanent boiler overheating alarm with sound signal is produced. If, during boiler overheating time, temperature measured by HUW sensor is higher than *Max. HUW temperature*, HUW pump goes off. In this manner, users of hot utility water are protected from burning. The alarm is reset by switching the regulator off and on.

⚠ Note: arrangement of temperature sensor outside the boiler water jacket (e.g. at the outlet pipe) is not recommended because boiler overheating may be detected with delay.

If the regulator is in the SUMMER mode, the regulator attempts in first instance to discharge excess heat to HUW container. The HUW pump goes OFF if the temperature measured by the HUW sensor is in excess of *max HUW temperature .*

17.3 Exceeding max. feeder temperature

This alarm will occur after the feeder temperature exceeds the service parameter:

Service settings → Boiler settings → Max. feeder temperature

If the feeder temperature exceeds this value, the regulator will enable the feeder for a constant, programmed time and will activate the poker. The airflow is disabled and the pumps are enabled. After „pushing the fuel out", the regulator disables the feeder and does not activate it again, even if the feeder temperature is still high.

This alarm can be cancelled only after the feeder temperature decreases, by pressing the encoder knob or by restarting the regulator.

⚠ The function of protection against flame recession is inoperative if the feeder sensor is disconnected or damaged.

⚠ The function of protection against flame recession is inoperative if the regulator is not powered.

⚠ Regulator cannot be used as the only protection against flame recession in a boiler. Use additional protective automatics.

17.4 Feeder temp. sensor damaged

This alarm occurs in case of boiler temperature sensor damage and excess of

its measurement range. Upon occurrence of this alarm, boiler, HUW and mixer pumps start to possibly cool down the boiler. To reset the alarm - switch OFF and ON the regulator. Check the sensor and replace it, if necessary.

See sec. 11.8

17.5 Feeder temp sensor damaged

This alarm occurs in case of damage of fuel feeder temperature sensor and excess of its measurement range. To reset the alarm - switch OFF and ON the regulator. Check the sensor and replace, if necessary.

See sec. 11.8

17.6 Feeder control system failure

The alarm occurs when an electronic control circuit of the feeder is damaged. In that case the feeder become controlled by an electromechanical relay, and because of that feature boiler operation will not stop – which is especially important during heating season. The regulator then works in the safe mode, which is indicated by a prompt „Feeder control system failure" on the screen.

Warning: due to reduced safety, long-term use of the regulator in the safe mode is forbidden. Maximum operation period in the safe mode is 30 days. It is recommended to immediate submit the regulator to the service repair.

18 ADDITIONAL FUNCTIONS

In addition to the foregoing functions, the regulator performs also various other functions.

18.1 Power supply decay

In the cases of power supply failure, the regulator will resume the operation mode in which it was before the failure.

18.2 Protection against freezing

If the boiler temperature drops below 5 °C, the CH pump will be enabled, thus forcing circulation of the boiler water. This will delay the process of water freezing, yet in the case of great frost or shortage of power, it will not protect the system against freezing.

18.3 Preventive cooling down

Using this function, the regulator attempts to cool down the boiler before entering permanent boiler overheating alarm. Details - see sec. 17.2.

18.4 Protection of pumps against locking

Regulator performs the function of boiler, HUW and mixer pumps and servo protection from locking caused by scale deposit. To do this, these components are periodically (every 167 h) switched on for few seconds. In this way the pumps are protected from immobilization caused by scale deposits. Therefore, during boiler shut-down, power supply to the regulator should be on, and the regulator should be in STOP mode.

18.5 Feeder protection

In the regulator there is applied an additional protection which improves safety – it protects the boiler from continuous fuel feeding in case of the feeder control circuit failure. Thanks to that feature the user is immediately informed about the feeder control circuit failure, and the regulator immediately enters the safe mode. See section 17.6 on page 42 for more details.

19 REPLACEMENT OF PARTS AND COMPONENTS

19.1 Replacement of mains fuse

Mains fuse is located in the Operating Unit. It protects the regulator and other equipment.
In case of replacement, use 6.3
In order to take out the fuse, raise the fuse holder using flat-blade screwdriver and take out the fuse.

20 Troubleshooting

Faults	Hints
The display is blank despite connection to power supply.	Check: if the main fuse is burnt-out and replace if so, ▪ if the lead connecting the panel with the module is properly plugged in, and if it's not damaged.
Preset CH temperature on the display is different than the programmed one.	Check, if: HUW container is being filled and preset HUW temperature is set at the value higher than boiler preset temperature. If YES - read-out variations will disappear once HUW container has been pre-heated, or reduce preset value of HUW container. room thermostat is ON – set the service parameter Red. preset b. temp. at ,"0" ▪ night time decrease is ON; if YES- switch it off
CH pump is inoperative.	Check, whether: ▪ boiler temperature has exceeded the value set in CH pump activation temperature (MENU → boiler pump). If YES- wait or reduce the value set in this parameter, ▪ room thermostat prevents start of CH pump. If YES - set the parameter CH pump standstill time – at ,"0". See-sec.30 ▪ HUW priority to prevent CH pump start is ON. If YES- disable it by setting HUW pump mode at No priority. See sec.11 ▪ HUW pump is damaged or locked.
The fan is inoperative.	▪ If YES, and the boiler temperature is lower than the preset value by DelT lack of fuel - it is a normal condition related to detection of lack of fuel..
Fuel feeder inoperative/ fails to feed.	▪ blow-in output is too low - increase it, ▪ check whether connecting terminals 1-2 of STB safety temperature limiter are bridged (jumper should be provided only in case temperature limiter is not connected). ▪ if the boiler is equipped with STB temperature limiter with manual return to home position - release the limiter. To do this, remove the lid and press push-button acc. documentation provided by boiler manufacturer, ▪ check the setting of "Fuel Feeder and Blow-In and set at ON in MENU → Boiler Settings , ▪ check the fan and replace, if necessary,
When the Individual Fuzzy Logic mode is on, the fuel is not completely burned, there are unburned particles of fuel in the ash.	▪ check whether feeder wires are correctly connected to the terminals, ▪ if STB temperature limiter is connected to terminals 1-2 - check whether power supply has not been cut off due to boiler overheating, ▪ check whether feeder motor is not faulty, ▪ check the setting of "Fuel Feeder and Blow-In and set at ON in MENU → Boiler Settings , ▪ in case motor is running and fuel is not supplied - replace cotter pin in coupling of fuel feeder acc. boiler manual.
When the Individual Fuzzy Logic mode is on, the fuel burns out too intensively	▪ reduce fuel feeding rate by lower setting of the parameter Fuel correction in Fuzzy Logic mode. See sec. 7.7, ▪ check whether incompletely burnt fuel comes from operation in SUPERVISION mode. If YES - adjust this mode acc. sec. 11, ▪ check whether incompletely burnt fuel is produced by frequent change-over from SUPERVISION to OPERATION mode and V/V, Cycle order OPERATION acc. sec. 36, ▪ if the regulator has the option of fuel type selection - make sure the correct fuel type has been selected (see sec. 7.10 – Fuzzy Logic mode does not allow burning a blend of fine coal and ECO-pea coal),

	▪ check whether correct type of boiler/ burner has been selected. See sec. 21.1 ▪ open fully fan baffle and/ or return flap ▪ clean off ducts supplying air to the furnace ▪ change Fuzzy Logic settings in: MENU → Service Settings → Boiler Settings → Burner Settings → Fuzzy Logic (accessible to boiler manufacturers only)
When Fuzzy Logic mode is active, combustion is too intensive and the furnace lowers into retort.	▪ increase fuel feeding rate by higher setting of the parameter Fuel correction in Fuzzy Logic mode. See sec. 7.7 ▪ check whether too intensive combustion occurs in SUPERVISION mode. If YES - adjust this mode acc. sec. 11, ▪ check whether too intensive combustion is caused by the setting Cycle order OPERATION - see sec. 37, ▪ if the regulator has the option of fuel type selection - make sure the correct fuel type has been selected (see sec. 7.10), ▪ check whether correct type of boiler has been selected. See sec. 21.1. ▪ change Fuzzy Logic settings in: MENU → Service Settings → Boiler Settings → Burner Settings → Fuzzy Logic (accessible only to boiler manufacturers only)
The temperature is measured incorrectly	▪ Check if there is a good thermal contact between the temperature sensor and measured surface, ▪ Check if sensor wire not goes too closely to network wire, ▪ Check if sensor is connected to terminal, ▪ Check if sensor is not broken – check with point 11.8
In the DHW=SUMMER mode, the radiators are hot and the boiler overheats.	▪ increase the setting of the parameter: *HUW pump operation extension time* to cool down the boiler. See sec. 39, ▪ increase the setting of the parameter: *max. HUW temperature* to enable excessive heat discharge to HUW container. See sec. 42, Note: inform the users of high temperature of hot utility water!
the DHW pump is active even if the DHW tank has been filled.	▪ Set the parameter *HUW pump operation time extension = 0*, sec.38
The boiler overheats despite disabled airflow	▪ the reason may be boiler defect or improper chimney design - lack of protection against too excessive flue draught.
In hydraulic system with mixing valve and servo - mixer is closed	▪ The reason may be response of return protection function - see sec.37. If the return protection function is active, i.e. Return Protection 4D = ON - check whether the sensor of water return to the boiler is thermally isolated from environment and apply thermal paste to improve thermal contact between the sensor and the pipe. Increase preset boiler temperature to have enough power to heat return water. Check whether hydraulic system is properly made - upon valve closing, return temperature should increase to above the value set in the parameter "Min.return temperature" + "Return temp. hyst". ▪ the reason may be filling HUW container at active HUW priority. Wait until completed HUW container filling or deactivate HUW priority, ▪ the reason may be active SUMMER function,
In hydraulic system with mixing valve and servo – preset boiler/mixer temperature is not stable - servo performs unnecessary movements	▪ Adjust the parameters: *Mixer input dead zone* or *Proportional range* or *Integr. time const.*

21 Regulator setting by boiler manufacturer.

CAUTION: THE INDIVIDUAL FUZZY LOGIC PROGRAM IS SELECTED INDIVIDUALLY TO THE GIVEN BOILER TYPE. MAKE SURE THAT THE FITTINGS FOR BOILERS TESTED IN THE PLUM LABORATORIES ARE COMPATIBLE WITH FITTINGS FOR SOLD BOILERS. IT IS INADMISSIBLE TO REPLACE THE FEEDER AND FAN TO OTHER TYPES AS WELL AS MAKING OTHER CONSTRUCTIONAL MODIFICATIONS WHICH CAN HAVE IMPACT ON COMBUSTION PROCESS.

21.1 Activating Individual Fuzzy Logic and changing boiler type

To activate Fuzzy Logic mode - enter hidden MENU:

MENU→Service Settings → Enter special password.

Special password is made available to boiler manufacturers and authorized installer contractors only.

Select proper boiler/burner type in which the regulator will be mounted from the menu. If a given boiler type is not specified - set the option ,"Fuzzy logic = OFF". With this setting, the regulator may be used in STANDARD mode only, and Fuzzy Logic function will be disabled. Return the regulator to factory settings to activate the changes.

Note: selection of improper type of the boiler, which has not been tested in test house of PLUM sp. z o.o., may cause incorrect boiler operation

Settings for individual boilers have to be agreed between the boiler manufacturer and PLUM sp. z o.o.

Boiler manufacturer may set Fuzzy Logic function by himself. These parameters are available in:

MENU → Service Settings → Boiler Settings → Burner Settings → Fuzzy Logic.

List of available settings is usually hidden and accessible upon setting the parameter *Show hidden parameters = YES.* This parameter is available in separate menu upon entry of special password.

22 Change record

ul. Wspólna 19, Ignatki
16-001 Kleosin
Poland
tel. +48 85 749-70-00
fax +48 85 749-70-14
plum@plum.pl
www.plum.pl
www.plumelectronics.eu

USER'S MANUAL

Updated user's manual are available at www.pereko.pl

Quatro PSQ

SCREW-CONVEYOR FEEDER

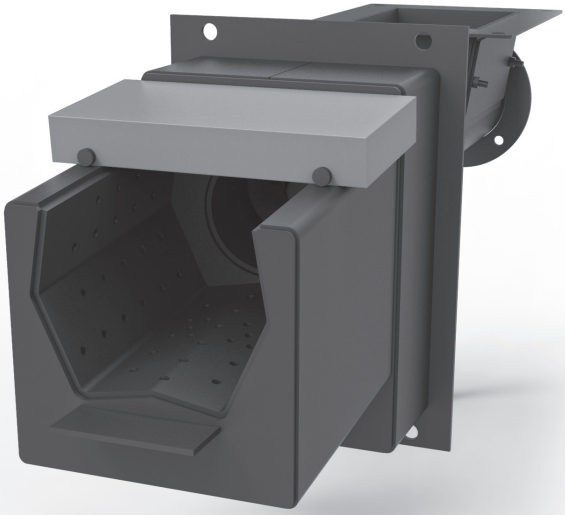

Producer:

Envo sp. z o.o.,

27-200 Starachowice, ul. Radomska 76, POLAND

www.grupaenvo.pl

Technical support

tel. +48 (41) 274 53 53, fax +48 (41) 274 53 26

e-mail: serwis@pereko.pl,

mobile +48 602 315 512, 604 953 459, 660 726 577

www.pereko.pl

PEREKO®

ciepło jest żółte

TABLE OF CONTENTS

1. GENERAL INFORMATION

1.1. Applications

Screw-conveyor feeder PSQ is intended for automatic feeding of fuel in low-temperature central heating boilers (where water temperature does not exceed 95°C). Rated power of the burner depends on calorific value and type of fuel.

1.2. Fuel

Eco-pea coal, pellet, fine coal and oats are used as a primary fuel, while each fuel used should have a grain size smaller than 31.5 mm.

Fuel parameters for the PSQ feeder:

- Hard coal assortment of pea type 31-2 (eco-pea coal)
  - Calorific value 25-28 MJ/kg
  - Grain size 0-31.5 mm
  - Volatile matter content > 28%
  - Weak sinterability (RI<20)
  - Moisture <15%
- Hard coal assortment of fine type I/II/III 31-2
  - Calorific value min. 20 MJ/kg
  - Grain size 0-31.5 mm
  - Volatile matter content > 28%
  - Moisture <15%
- Pellet
  - Calorific value 17.5-19.5 MJ/kg
  - Grain size 0-31.5 mm
  - Moisture content below 6 %
  - Density >1.25 kg/dm^3
- Oats
  - Moisture <10%

⚠ Note! Use of fuel with moisture content over 15% leads to quicker wearing (even several times) of components of the feeder as a result of corrosion and it can cause suspension of the fuel in the container.

2. ASSEMBLY INSTRUCTIONS

2.1. Feeder assembly

The PSQ feeder is installed on four screws M12x20 to the connecting plate in the boiler. Precisely seal the surface between the frame of the boiler and feeder using heat-resisting silicone to 1200°C. Precisely check screw connections and tighten them firmly before first start-up. Unscrew leg of the feeder to ensure that it precisely adheres to the substrate after installation.

⚠ Note! Adjust leg of the feeder to ensure that it adheres to the substrate before filling the fuel container.

2.2. Sealing

Bottom cleaning hole located under sieve of the burner should be sealed with a heat-resistant silicone up to 1200°C.

2.3. Assembly of post-combustion deflector

Chamotte plate (230×115×33 mm) used as a deflector for post-combustion of flammable gases is enclosed in the boiler. The plate should be placed in accordance with the figure 1.

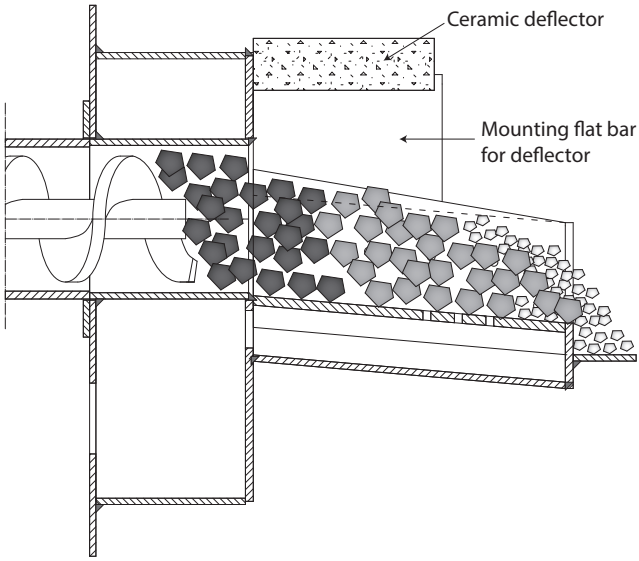

Figure 1. Assembly of ceramic deflector

2.4. Feeder protections

PSQ feeder is protected against pulling back of the heat to the container by:

- Temperature sensor for endless screw located in the controller. This sensor should precisely adhere on whole measuring length to the socket on the pipe of the feeder.
- one-function cooling valve (so-called fire-fighter), equipped with a bimetal temperature sensor inserted into a dedicated socket in the feeder and connector G1/2" on flexible hose screwed with a G1/2" connector to the feeder pipe.

⚠ Note! Remember about filling a ball of the "fire-fighter" with water.

2.5. Motoreducer and fan

Motoreducer of the PSQ feeder is protected with a split pin (M5 screw, class 5.8) protecting it against overloading and it transfers torque to the screw. Before each start-up, you should:

- check whether the split pin is at its location,
- connect plug of the motoreducer and fan to the controller,
- activate the corresponding direction of feeding rotations using the switch on a box of the motor.

3. OPERATION

3.1. Firing up

1. Check the water level in the bulb of the fire-fighter and position of the feeder temperature sensor before firing up. Then place a switch controlling the direction of the revolutions in a motor box in a position allowing feeding the fuel.
2. Fill the fuel container.
3. Switch on feeding until fuel will be located in the central position of the burner.
4. Place fire-starter or pieces of paper, wood on the fuel and set on fire.
5. Start the fan and wait for uniform firing up of the primary fuel.
6. Switch to automatic operation of the feeder after firing up.

3.2. Firing

Select feeder control parameters after firing up in the furnace ensuring maintaining heat in the central part of the burner and ensuring that only completely burnt fuel falls down to the ash-pan (figure 2).

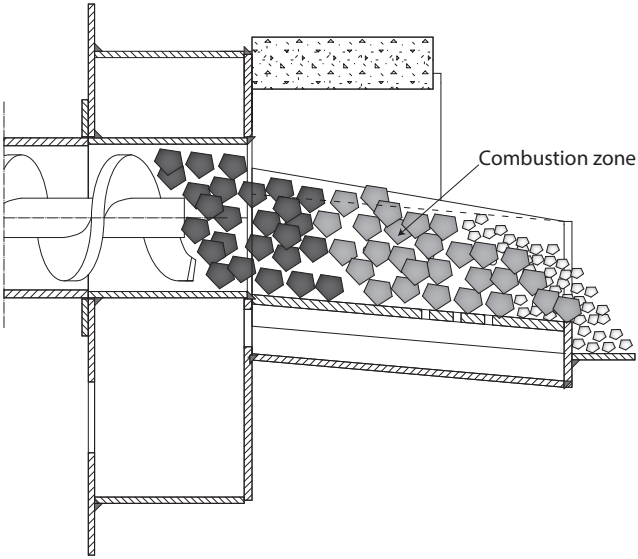

Figure 2. Correct appearance of the furnace

⚠ ATTENTION! Fuel, not meeting the quality requirements may not burn completely, can form sinters and slag (too much ash). Therefore, you should test purchased fuel before each heating season.

3.2.1 PELLET COMBUSTION

In case of combustion of light pellet, e.g. made of straw, it is necessary to use post-combustion angle bar, fig. 3, which prevents too early falling of the pellet to the ash-pan.

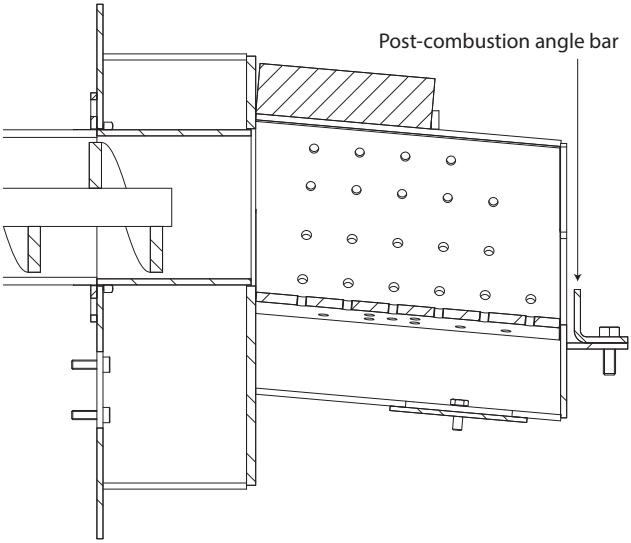

Figure 3. Assembly of post-combustion angle bar

3.3. Shutdown

Shutdown fan and feeder to shutdown a boiler. Wait until the flame goes out and push heat to ash-pan (manual operation on the controller).

3.4. Rupture of split pin

If the split pin is ruptured: 1) switch off the motoreducer on motor to "0" position"; 2) knock out old split pin; 3) centre hole of the endless screw with hole of the motoreducer sleeve using a wrench; 4) insert new split pin (screw M5 5.8); 5) empty the container using cleaning holes located below and start the endless screw by changing the direction of its rotations to reverse. After pushing out the fuel you should switch the direction of revolutions of the motoreducer to allow feeding.

3.5. Maintenance

- Unscrew cleaning hole or the air chamber under sieve of the burner, clean the chamber and reseal it, before each heating season or when you notice a decrease of blowing force.
- Remove fuel from the container or push out whole fuel from the endless screw and clean the burner after the heating season.

⚠ Note! Leaving fuel in the container and endless screw will result in the occurrence of corrosion.

- Motoreducer is filled with oil for a whole period of operation and does not require additional lubrication.

4. PARTS LIST

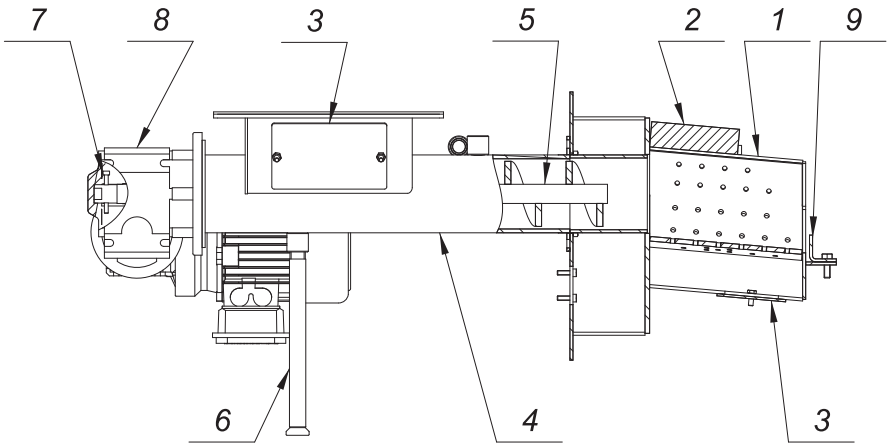

Figure 4. PSQ feeder

No.	Name	PSQ 19	PSQ 27	PSQ 38
1	W burner	19.1	27.1	38.1
2	Ceramic deflector	19.7	19.7	19.7
3	Cover of cleaning hole	19.3	19.3	19.3
4	Feeder pipe	19.4	19.4	19.4
5	(Endless) screw	19.5	19.5	19.5
6	Feeder leg	19.6	27.6	27.6
7	Split pin	M5 5.8	M5 5.8	M5 5.8
8	Motoreducer	–	–	–
9	Post-combustion angle bar	19.8	19.8	19.8

WARRANTY CARD

ENVO sp. z o.o.
27-200 Starachowice, ul. Radomska 76, POLAND

Serial number .....

Type .....

Production date .....

WARRANTY TERMS AND CONDITIONS

- The warranty card without a date, stamp, signatures is invalid.
- Copies shall not be issued if the warranty card is lost.
- Warranty for correct operation of the PSQ feeder confirmed by a stamp of the company and retailer and signature of the seller is provided for 24 months from a date of purchase, while not longer than 32 months from the date of production.
- Screws, nuts, secondary air injections are not subject to warranty. They are classified as wear and tear components and their replacement is extra paid.
- The company is obliged to execute the repair within 21 days from the date of notice by the purchaser.
- The warranty card is the only document authorizing the purchaser for free warranty repair.
- Quality claims concerning the feeder should be made in sales location or directly to the producer.

The warranty is void in case of:

- Repairs during the warranty carried out period by person and companies without authorization from the producer.
- • Damages resulting from non-observance of assumptions contained in the manual.

▲ NOTE! If the claim is not justified then costs connected with the arrival of the representative of the producers shall be borne by the claimant.

.....	.....	.....
sign and stamp of the producer	date of sale	sign and stamp of the seller

wer. 13-12-2017 r.